Setting big things into motion.

Industrial Controllers Catalog 2015

GESSMANN®
Industrial Controllers

GESSMANN®

Industrial Controllers

Tool for Designers, Engineers and Purchasing Agents

Your tool for finding industrial controllers for cranes, electro-hydraulic systems, floor conveyors, industrial applications, ships, rail vehicles, and construction machinery of any kind, joysticks and masterswitches with electronic interface adjustment for all machines matching our product portfolio. Take advantage of our **fold-out order tool** on this page and the **detailed tables of contents** at the beginning of each position.

Product range

1

Multi-axis controller
Double-handle controller
Single-axis controller
Control switch
Standard contact-arrangement
Ordering information
Technical data

2

Potentiometer
HG 1
OEC 2
OEC 4
Electronic control unit
MATRIX grip
Hall-push button
Palm grip
Housing

3

Crane control unit
Driver seat
Portable control unit
Control pedestal for offshore

4

Naval cruise controller
Pedal-controller
Gear limit switch
DC-contact
Signal-cam controller

As of
2015

Product Portfolio

Gessmann is an international market leader. Our success in the market is based upon our decisive focus on innovative product development and the highest possible standards when it comes to quality. Our product range includes:

- Multi-axis controller, double-handle controller, control switch (master-switch), gear limit switch for hoisting, electro-hydraulic application, material-handling technology and remote control
- Geared limit switch for joisting equipment
- Complete crane control unit, portable control unit, pendant control unit, including wiring for all types of cranes, vehicles and industrial applications
- Operating panels for construction machinery, industrial applications, vehicles and harvesting machines
- Control pedestals, ship-operating transmitters, sensor units and actual-value transmitters for ship drives
- Pedal controllers for welding machines, road and rail vehicles
- Master controllers, panels and control stations for rail vehicles
- Displays for forklifts and construction machinery
- Proportional control electronics for solenoid valves
- Interface electronics with digital and analog outputs matching our controllers
- Interface electronics with Profibus interface or CAN-bus interface matching our controllers (input/output cards)
- DC controllers, selector switches (signal controllers) for high-voltage systems
- Customized solutions for operating devices and electronic units for any type of machinery and vehicles

Management certification:

ISO 9001 Certified IRIS Certification

Contents

GESSMANN
Industrial Controllers

Multi-axis controller	V6 / VV6	S. 1-5
	V11	S. 6-9
	V8 / VV8	S. 10-13
	V85 / VV85	S. 14-22
	V24	S. 23-26
	V25	S. 27-32
	V14	S. 33-36
	V20	S. 37-38
	V22	S. 39-40
	V23	S. 41-42
	V21	S. 43-44
Double-handle controller	D64 / DD64	S. 45-49
	D8	S. 50-53
	D85	S. 54-59
	D3	S. 60-64
Single-axis controller	S1	S. 65-67
	S11	S. 68-71
	S14	S. 72-74
	S2 / SS 2 / S21	S. 75-79
	S22 / SS22	S. 80-83
	S23	S. 84-86
	S26	S. 87-90
	S27	S. 91-94
	S3	S. 95-98
	S9	S. 99-100
Control switch	N6	S. 101-103
	N9	S. 104-105
Standard contact-arrangement		S. 106-107
Ordering information		S. 108-112
Technical data		S. 113-114
Potentiometer		S. 115
HG 1		S. 116-117
OEC 2		S. 118-120
OEC 4		S. 121
Electronic control unit		S. 122-123
MATRIX grip		S. 124
Hall-push button		S. 125-127
Palm grip	B1	S. 128-129
	B2	S. 130-131
	B3	S. 132-134
	B5	S. 135-136
	B6	S. 137-138
	B7 / B8	S. 139-140
	B9	S. 141-142
	B10	S. 143-144
	B14 / B15	S. 145-146
	B20	S. 147-148
	B22	S. 149-150
	B23	S. 151-152
	B24	S. 153-154
	B25	S. 155-156
	B28	S. 157-158
	B29	S. 159-160
Housing		S. 161-162
Crane control unit	KST 4	S. 163-165
	KST 5	S. 166-168
	KST 6	S. 169-171
	KST 7 / KST 75	S. 172-174
	KST 8	S. 175-177
	KST 85	S. 178-179
	KST 10	S. 180-182
	KST 19	S. 183-185
Driver seat	KFS 2	S. 186-187
	KFS 4	S. 188-189
	KFS 82	S. 190-191
	KFS 9	S. 192-193
	KFS 10	S. 194-195
	KFS 11	S. 196-197
	KFS 12	S. 198-199
Portable control unit	TS 1	S. 200-202
	TS 2	S. 203-205
Control pedestal for offshore	U 22/32	S. 206-208
	U 23/23	S. 209-211
Naval cruise controller	AZ 1	S. 212-213
Pedal-controller	P7 / PP7	S. 214-215
	P8 / PP8	S. 216-217
	P10 / P11 / P12	S. 218-219
Gear limit switch	GE 1/2	S. 220-222
DC-contact	SO / SS	S. 223-224
Signal-cam controller	NU 1	S. 225-227

General Terms and Conditions

GESSMANN
Industrial Controllers

For our general conditions for sale and delivery please refer to our website at www.gessmann.com

Please also note:

Our catalog prices do not include value added tax, which is added separately.

The prices are ex-works in Leingarten excluding packaging. Packaging is charged at cost and cannot be returned. For orders below EURO 150.00 our gross prices are applicable. The minimum invoice amount is EURO 80.00, regardless of the value of the delivered goods. Therefore, we recommend combining small orders.

We are entitled to pass on any additional handling and production costs resulting from modifications to the order caused or requested by the customer (both technical modifications and non-compliance with deadlines).

Our periods of payment are: 30 days without a discount.
These conditions of payment shall be deemed agreed and accepted upon receipt of our written confirmation of orders.

All delivered goods shall remain our sole and absolute property until full payment is received.

The delivery period only commences upon clarification of all technical details. Unforeseen circumstances justify an appropriate extension of the delivery period. All documents, such as drawings, dimensional drawings, circuit diagrams, etc., are non-binding. We reserve the right to make any changes necessary, in particular changes which serve the technical advancement.

The exclusive place of jurisdiction is 74072 Heilbronn, Germany.

Warning

Certain parts of this electrical device carry hazardous voltages when in operation.
Installation, maintenance, modification or retrofitting may only be carried out by qualified personnel in consideration of the appropriate safety precautions.
Non-compliance may result in death, severe injuries or substantial property damage.

W. Gessmann GmbH

P/O Box 11 51
74207 Leingarten
GERMANY

Eppinger Straße 221
74211 Leingarten
GERMANY

Phone +49 (0) 7131 40 67-0
Fax +49 (0) 7131 40 67-10

gessmann@gessmann.com
www.gessmann.com

Bank details
Deutsche Bank Heilbronn (BLZ 620 700 81) account-no.: 01 94 605
SWIFT-Code: DEUT DE SS 620 · IBAN-Code: DE 14 620 700 81 0019460500
Kreissparkasse Heilbronn (BLZ 620 500 00) account-no.: 4776
SWIFT-Code: HE IS DE 66 · IBAN-Code: DE 22 620 500 000 00 0004776
Landesbank Baden-Württemberg (BLZ 620 501 01) account-no.: 74 06 50 56 07
SWIFT-Code: SOLA DE ST · IBAN-Code: DE 09 600 501 01 74 06 50 56 07

Tax No.: 65205/74401 Finanzamt Heilbronn
Sale tax ID No.: DE 145786508

Commercial Register
Stuttgart HRB 100312

Managing Director:
Alwin Ehrensperger

Multi-axis controller
V6 / VV6

GESSMANN Industrial Controllers

The multi-axis controller V6 / VV6 is available in either single-axis or multi-axis options and is a robust controller used commonly in electro-hydraulic applications.
The modular design and many possibilities of combination with our handles enables the switching device to be used universally.
The V6 / VV6 is resistant to oil, maritime conditions e.g. offshore / vessels, UV radiation typically from the sun.

Technical data

Mechanical life V6	10 million operating cycles
Mechanical life VV6	20 million operating cycles
Operation temperature	-40°C til +60°C
Degree of protection	IP 54 front

Example

V62L	S5	P	T	- 01 Z P	+ 03A R C	- A05 P134	+ A110 C01	- X

Basic unit

V62L	2-axis left

Control-handle extended

S5	-20 mm

Gate

P	Cross gate

Grip / palm grip

T	Dead man

Axis 1 (direction 1-2)

01	2 Contacts (2A 250V AC15)
Z	Spring return
P	Potentiometer

Axis 2 (direction 3-4)

03A	6 Contacts (4A 250V AC15)
R	Friction brake
C	Opto-electronical encoder

Describtion axis 1 (direction 1-2)

A05	Arrangement MS 21
P134	Potentiometer T396 2x5 kOhm

Describtion axis 2 (direction 3-4)

A110	Arrangement MS 24-0
C01	OEC 2-1-1

Special model

X	Special / customer-specific

Technical details may vary based on configuration or application! Technical data subject to change without notice!

Multi-axis controller
V6 / VV6

GESSMANN Industrial Controllers

Combination possibilities with our ball handles

B1	B3	B5	B6	B10	B14 B15	B22	B24	B28
S. 128	S. 132	S. 135	S. 137	S. 143	S. 145	S. 149	S. 153	S. 157

1

V62L S5 P T - 01 Z P + 03A R C - A05 P134 + A110 C01 - X

Basic unit

V61L	1-axis left
V61R	1-axis right
V61.1	1-axis
V64.1	1-axis
V62L	2-axis left
V62R	2-axis right
V64	2-axis
	reinforced version
VV61L	1-axis left
VV61R	1-axis right
VV61.1	1-axis
VV64.1	1-axis
VV62L	2-axis left
VV62R	2-axis right
VV64	2 axis

Control-handle extended*

	Standard 180 mm
S3	-40 mm
S5	-20 mm
S8	+20 mm

**Only available in combination with handle!*

Gate

P	Cross gate
P X	Special gate

Grip / palm grip

	Knob *(standard)*
M	Mechanical zero interlock
MN	Mechanical zero interlock (push down)
T	Dead man
MT*	Mechanical zero interlock + dead man
H	Signal button
MH	Mechanical zero interlock + signal button
D	Push button
MD*	Mechanical zero interlock + push button
DV	Flush push button
MDV*	Mechanical zero interlock + flush push button

**Only possible with VV6!*

B... Palm grip B... *(see Palm grip page 128)*

Attention! When using some handles reduces the deflection angle to 28 degrees!

Identification of the installation variants with switching directions:

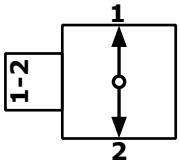

V61L/VV61L

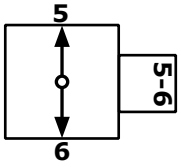

V61R/VV61R

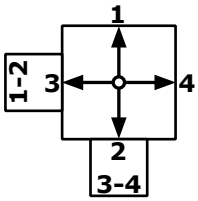

V62L/VV62L

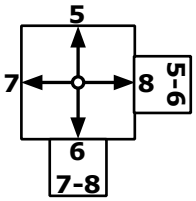

V62R/VV62R

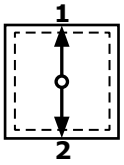

V64.1/VV64.1

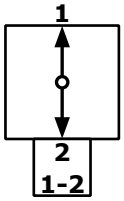

V61.1/VV61.1

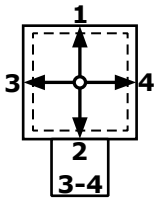

V64/VV64

Technical details may vary based on configuration or application! Technical data subject to change without notice!

V2015/1 10.02.2015

V62L S5 P T - 01 Z P + 03A R C - A05 P134 + A110 C01 - X

Axis 1: direction 1-2 left / direction 5-6 right

(Standard contacts gold-plated 2A 250V AC15)

01	☐	2 contacts	Standard contact - arrangement see page 106
02	☐	4 contacts	z.B.
03	☐	6 contacts	A980 MS 00
04	☐	8 contacts	A05 MS 21
05	☐	10 contacts	A0500 MS 21-00
06	☐	12 contacts	A110 MS 24-0
	A	= silver contacts (4A 250V AC15)	*A99 contact - arrangement according customer request*

Z	Spring return			
R	Friction brake			
(P)	Possibility of mounting potentiometer and encoder (Gessmann-types)			
P	Potentiometer	P131	T396 2x0,5 kOhm	I max. 1 mA
		P132	T396 2x1 kOhm	I max. 1 mA
		P133	T396 2x2 kOhm	I max. 1 mA
		P134	T396 2x5 kOhm	I max. 1 mA
		P135	T396 2x10 kOhm	I max. 1 mA
		More potentiometer on request!		
C	Encoder	C... Encoder see page 118		

If both axis identical, it`s enough to describe one axis!
Beispiel A05P134 + A05P134 => A05P134

V62L S5 P T - 01 Z P + 03A R C - A05 P134 + A110 C01 - X

Axis 2: Direction 3-4 left / Direction 7-8 right *(not applicable to V/VV61, V/VV61.1, V/VV64.1)*

(Standard contacts gold-plated 2A 250V AC15)

01	☐	2 contacts	Standard contact - arrangement see page 106
02	☐	4 contacts	z.B.
03	☐	6 contacts	A980 MS 00
04	☐	8 contacts	A05 MS 21
05	☐	10 contacts	A0500 MS 21-00
06	☐	12 contacts	A110 MS 24-0
	A	= Silver contacts (4A 250V AC15)	*A99 contact - arrangement according customer request*

Z	Spring return			
R	Friction brake			
(P)	Possibility of mounting potentiometer and encoder (Gessmann-types)			
P	Potentiometer	P131	T396 2x0,5 kOhm	I max. 1 mA
		P132	T396 2x1 kOhm	I max. 1 mA
		P133	T396 2x2 kOhm	I max. 1 mA
		P134	T396 2x5 kOhm	I max. 1 mA
		P135	T396 2x10 kOhm	I max. 1 mA
		More potentiometer on request!		
C	Encoder	C... Encoder see page 118		

Technical details may vary based on configuration or application! Technical data subject to change without notice!

	V62L	S5	P	T	-	01 Z P	+	03A R C	-	A05 P134	+	A110 C01	-	X

Special model	
X	Special / customer-specific

Special model
Indicating labels
Indicating labels with engraving

1

Technical details may vary based on configuration or application! Technical data subject to change without notice!

page 4

V2015/1 10.02.2015

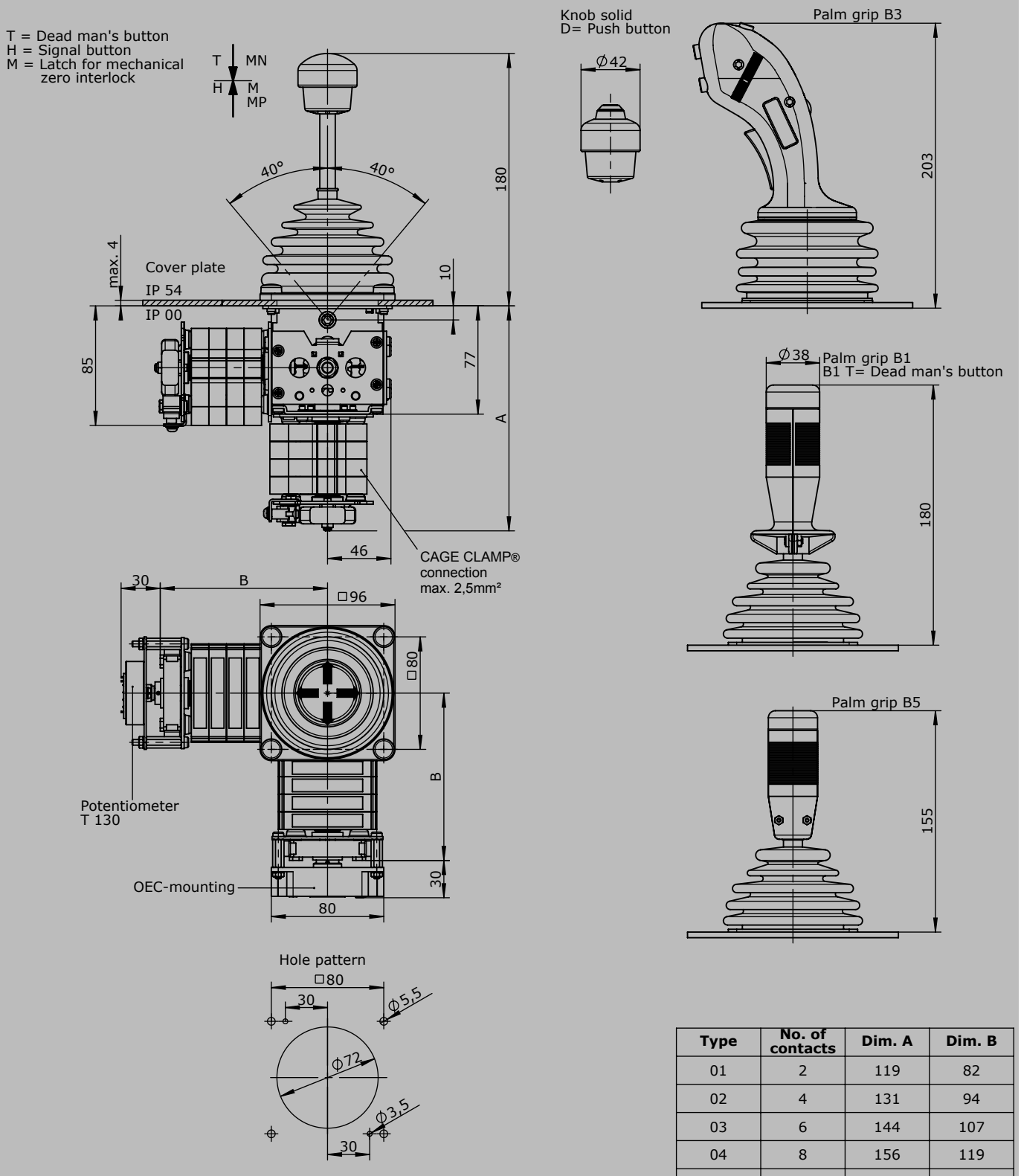

Type	No. of contacts	Dim. A	Dim. B
01	2	119	82
02	4	131	94
03	6	144	107
04	8	156	119
05	10	169	132
06	12	181	144

Technical details may vary based on configuration or application! Technical data subject to change without notice!

Multi-axis controller
V11

GESSMANN Industrial Controllers

The multi-axis controller V11 is a robust switching device for crane and hoisting applications. The modular design enables the switching device to be used universally. The V11 is resistant to oil, maritime conditions e.g. offshore / vessels, UV radiation typically from the sun.

1

Technical data

Mechanical life	10 million operating cycles
Operation temperature	-40°C til +60°C
Degree of protection	IP 54 front

Example

V11L	S5	P	T	- 01 Z P	+ 03A R	- A05 P324	+ A110	- X

Basic unit

V11L 2-axis left

Control-handle extended

S5 -20 mm

Gate

P Cross gate

Grip / palm grip

T Dead man

Axis 1 (direction 1-2)

01 2 Contacts (2A 250V AC15)

Z Spring return

P Potentiometer

Axis 2 (direction 3-4)

03A 6 Contacts (4A 250V AC15)

R Friction brake

Describtion axis 1 (direction 1-2)

A05 Arrangement MS 21

P324 Potentiometer T365 2x5 kOhm

Describtion axis 2 (direction 3-4)

A110 Arrangement MS 24-0

Special model

X Special / customer-specific

Technical details may vary based on configuration or application! Technical data subject to change without notice!

V2015/1 10.02.2015

Multi-axis controller
V11

GESSMANN Industrial Controllers

Combination possibilities with our ball handles

V11L S5 P T - 01 Z P + 03A R P - A05 P324 + A110 P325 - X

1

Basic unit

V11L	2-axis left
V11R	2-axis right
V11.1L	1-axis left
V11.1R	1-axis right

Control-handle extended*

	Standard 120 mm
S5	-20 mm
S8	+20 mm

**Only available in combination with handle!*

Gate

P	Cross gate
P X	Special gate

Grip / palm grip

	Knob *(included in basic unit!)*
M	Mechanical zero interlock
MN	Mechanical zero interlock (push down)
T	Dead man
H	Signal button
D	Push button
DV	Flush push button
B...	Palm grip B... *(see page palm grip 128)*

Identification of the installation variants with switching directions:

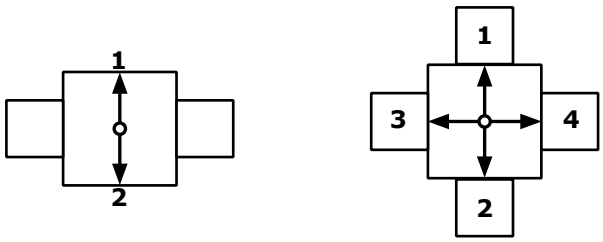

V11.1 V11

V11L S5 P T - 01 Z P + 03A R P - A05 P324 + A110 P325 - X

Axis 1: direction 1-2 left / direction 5-6 right

(Standard contacts gold-plated 2A 250V AC15)

01	☐ 2 contacts	Standard contact - arrangement see page 106		
02	☐ 4 contacts	z.B.		
03	☐ 6 contacts	A980	MS 00	
		A05	MS 21	
		A0500	MS 21-00	
		A110	MS 24-0	
	Ⓐ = Silver contacts (4A 250V AC15)	*A99 contact - arrangement according customer request*		

Z	Spring return			
R	Friction brake			
(P)	Possibility of mounting potentiometer and encoder (Gessmann-types)			
P	Potentiometer	P324	T316 2x5 kOhm	I max. 1 mA
		P325	T316 2x10 kOhm	I max. 1 mA
		More potentiometer on request!		
C	Encoder	C... Encoder see page 118		

Technical details may vary based on configuration or application! Technical data subject to change without notice!

GESSMANN Industrial Controllers

If both axis identical, it`s enough to describe one axis!
example: ...A05P324 + A05P324 => A05P324

V11L S5 P T - 01 Z P + 03A R P - A05 P324 + A110 P325 - X

1

Axis 2: direction 3-4 left / direction 7-8 right *(not applicable to V11.1)*

(Standard contacts gold-plated 2A 250V AC15)

01	☐	2 contacts (2A 250V AC15)	Standard contact - arrangement see page 106	
02	☐	4 contacts (2A 250V AC15)	z.B.	
03	☐	6 contacts (2A 250V AC15)	A980	MS 00
			A05	MS 21
			A0500	MS 21-00
			A110	MS 24-0
	A	= Silver contacts (4A 250V AC15)	*A99 contact - arrangement according customer request*	

Z	Spring return			
R	Friction brake			
(P)	Possibility of mounting potentiometer and encoder (Gessmann-types)			
P	Potentiometer	P324	T365 2x5 kOhm	I max. 1 mA
		P325	T365 2x10 kOhm	I max. 1 mA
		More potentiometer on request!		
C	Encoder	C... Encoder see page 118		

V11L S5 P T - 01 Z P + 03A R P - A05 P324 + A110 P325 - X

Special model

X Special / customer-specific

Special model

Indicating labels

Indicating labels with engraving

T = Dead man's button
H = Signalbutton
M = Latch for mechanical zero interlock

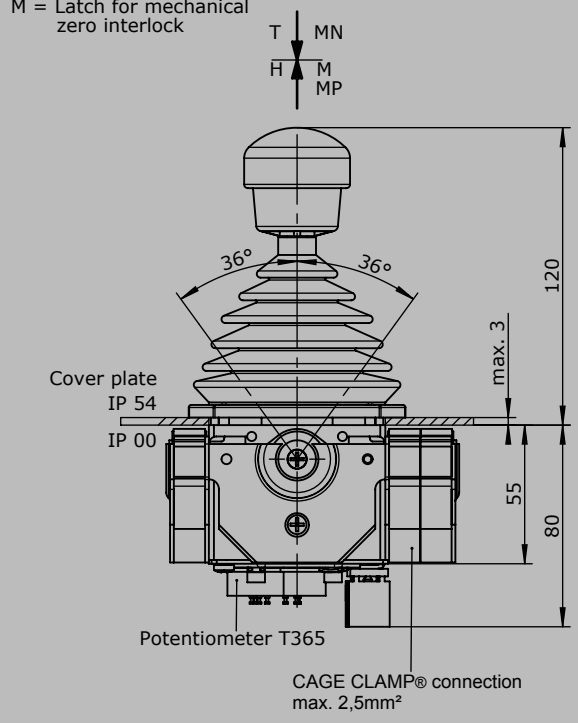

Knob solid
D= Push button

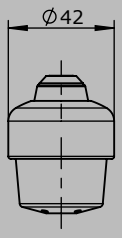

Palm grip B1

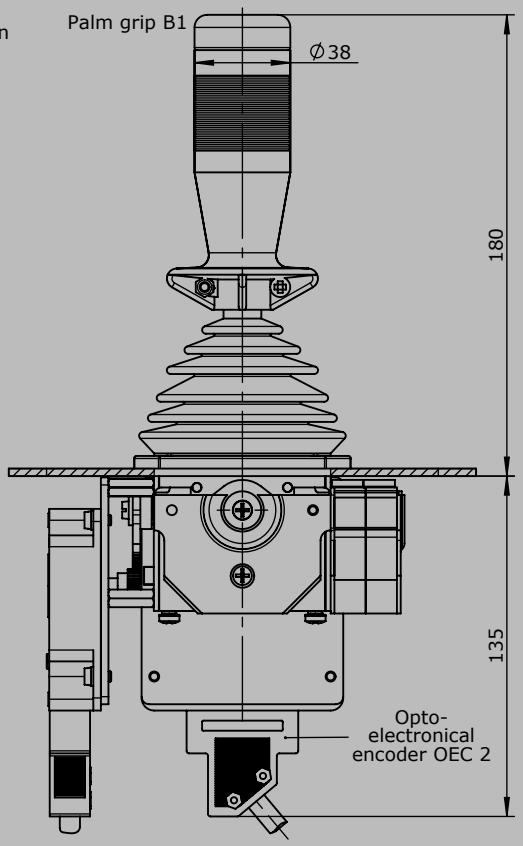

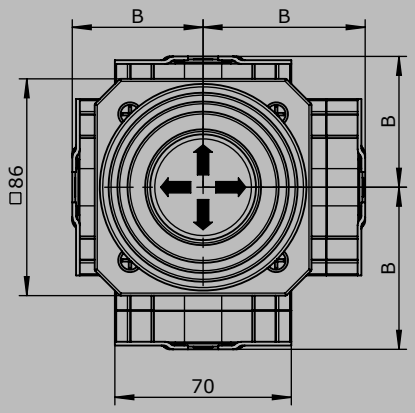

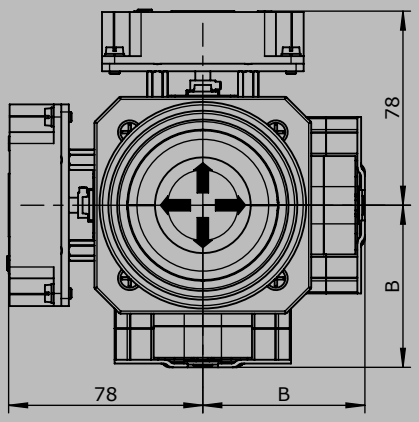

Hole pattern

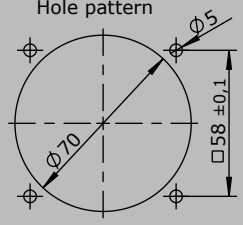

Type	No. of contacts	Dim. B
01	2	51
02	4	64
03	6	76

Technical details may vary based on configuration or application! Technical data subject to change without notice!

Multi-axis controller
V8 / VV8

GESSMANN Industrial Controllers

The multi-axis controller V8/VV8 is avialable in either single-axis or multi-axis options and is a robust controller used commonly in electro-hydraulic applications.
With many output options including voltage, amperage and switch contacts and many handle options the V8 / VV8 series is hugely customisable.
The V8 / VV8 is resistant to oil, maritime conditions e.g. offshore / vessels, UV radiation typically from the sun.

1

Technical data

Mechanical life V8	10 million operating cycles
Mechanical life VV8	20 million operating cycles
Operation temperature	-40°C til +60°C
Degree of protection	IP 54

Example

VV8	S5	P	T	- 2RP	+ 3ZP	- B	- A05 P184	+ A050 P184	E9012	- X

Basic unit

VV8 2-axis, reinforced version

Control-handle extended

Standard
S5 -20 mm
S8 +20 mm
**Only available in combination with handle!*

Gate

P Cross gate
P X Special gate

Grip / palm grip

T Dead man

Axis 1

2 2 Contacts
R Friction brake
P Potentiometer

Axis 2

3 Contacts
Z Spring return
P Potentiometer

Cover housing

B Cover housing

Describtion axis 1 (direction 1-2)

A050 Arrangement MSP 21-0
P184 Potentiometer T301 2x5 kOhm

Describtion axis 2 (direction 3-4)

A05 Arrangement MSP 21
P184 Potentiometer T301 2x5 kOhm

Interface *(description see on the following pages)*

E9012 Potentiometer output for proportional valve PVG32

Special model

X Special / customer-specific

Technical details may vary based on configuration or application! Technical data subject to change without notice!

V2015/1 10.02.2015

Multi-axis controller
V8 / VV8

GESSMANN Industrial Controllers

Combination possibilities with our ball handles

1

VV8	S5	P	T	- 2 R P	+	3 Z P	- B	-	A05 P184	+	A050	P184	E9012	-	X

Basic unit

V81	1-axis
V8	2-axis
	reinforced version
VV81	1-axis
VV8	2-axis

Control-handle extended

S5	-20 mm
S8	+20 mm

Gate

P	Cross gate
P X	Special gate

Grip/ palm grip

	Knob *(included in basic unit!)*
M	Mechanical zero interlock
MH	Mechanical zero interlock + signal contact
T	Dead man
H	Signal button
D	Push button
DV	Flush push button
B...	Palm grip B... *(see page palm grip 128)*

Axis 1: direction 1-2

1	1 contact	Standard contact - arrangement see page 106		
2	2 contacts	z.B.		
3	3 contacts	A98	MS 0	Zero position contact
		A05	MS 21	Direction contact
		A050	MS 21-0	Direction contact + zero position contact

Z	Spring return				
R	Friction brake only possible with VV8!				
(P)	Mounting options for potentiometer				
P	Potentiometer	P181	T301 2x0,5 kOhm	I max. 1 mA	
		P182	T301 2x1 kOhm	I max. 1 mA	
		P183	T301 2x2 kOhm	I max. 1 mA	
		P184	T301 2x5 kOhm	I max. 1 mA	
		P185	T301 2x10 kOhm	I max. 1 mA	
		More potentiometer on request!			
	Hall-Potentiometer	P43	T1360	0,5...2,5...4,5V/4,5V...2,5...0,5	

Technical details may vary based on configuration or application! Technical data subject to change without notice!

GESSMANN Industrial Controllers

1

If both axis identical, it`s enough to describe one axis!
example: ...A05P43 + A05P43 => A05P43

VV8 S5 P T - 2 R P + 3 Z P - B - A05 P184 + A050 P184 E9012 - X

Axis 2: direction 3-4 *(not applicable to V81/VV81)*

01	1 contact	Standard contact - arrangement see page 106			
02	2 contacts	z.B.			
03	3 contacts	A98	MS 0	Zero position contact	
		A05	MS 21	Direction contact	
		A050	MS 21-0	Direction contact + zero position contact	
Z	Spring return				
R	Friction brake only possible with VV8!				
(P)	Mounting options for potentiometer				
P	Potentiometer	P181	T301 2x0,5 kOhm	I max. 1 mA	
		P182	T301 2x1 kOhm	I max. 1 mA	
		P183	T301 2x2 kOhm	I max. 1 mA	
		P184	T301 2x5 kOhm	I max. 1 mA	
		P185	T301 2x10 kOhm	I max. 1 mA	
		More potentiometer on request!			
	Hall-Potentiometer	P43	T1360	0,5...2,5...4,5V/4,5V...2,5...0,5	

VV8 S5 P T - 2 R P + 3 Z P - B - A05 P184 + A050 P184 E9012 - X

Cover housing

B	Cover housing

Interface

	Potentiometer output	
E901	Potentiometer output for proportional valve PVG32	
	0,25...0,5...0,75Us	
1		1 axis
2		2 axis
3		3 axis
4		4 axis

Special model

X	Special / customer-specific

Technical details may vary based on configuration or application! Technical data subject to change without notice!

V2015/1 10.02.2015

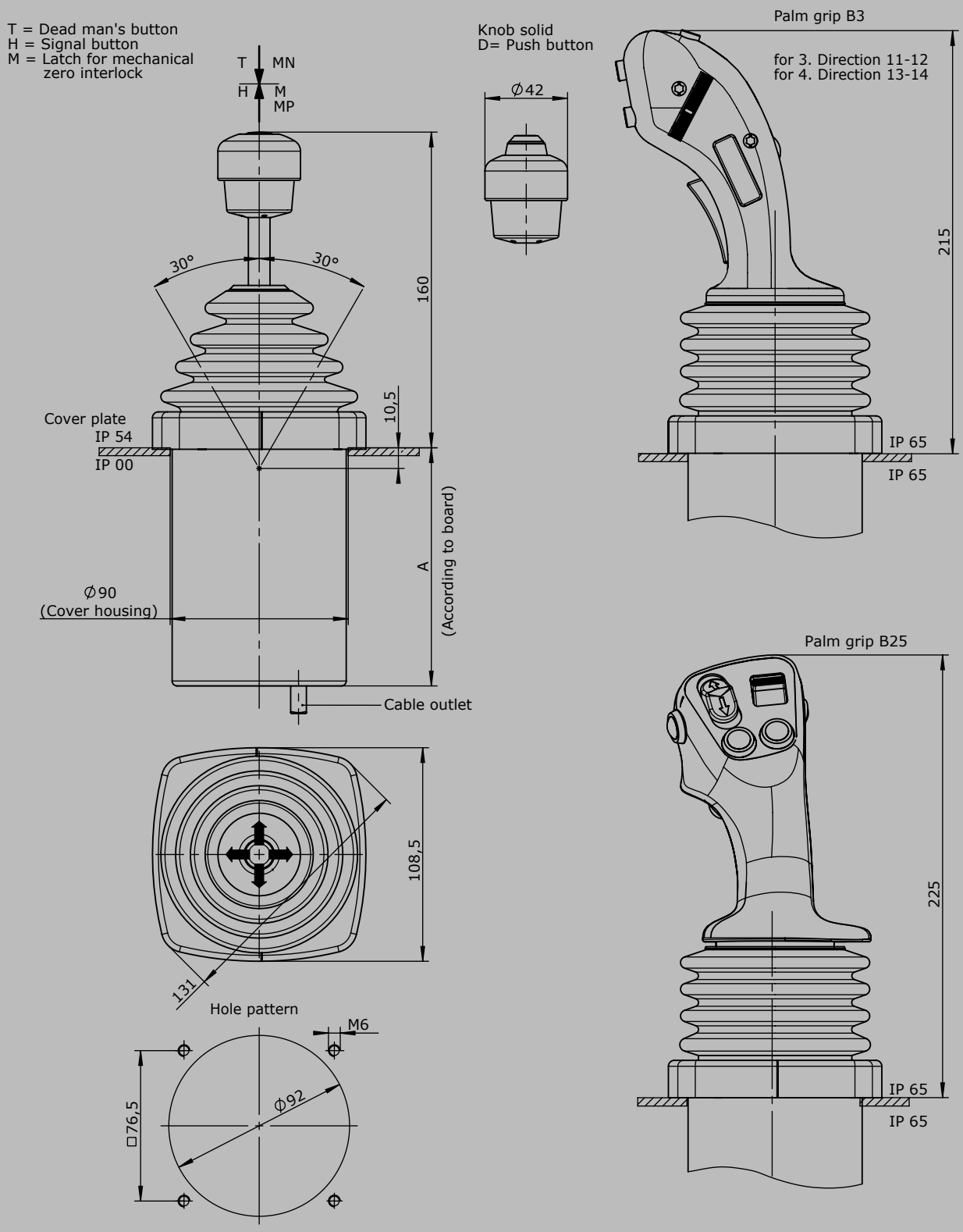

Technical details may vary based on configuration or application! Technical data subject to change without notice!

Multi-axis controller
V85 / VV85

GESSMANN Industrial Controllers

The multi-axis controller V85/VV85 is available in either single-axis or multi-axis options and is a robust controller used commonly in electro-hydraulic applications.
With many output options including voltage, amperage and switching contacts and many handle options the V85/VV85 series is hugly customisable.
The V85/VV85 is resistant to oil, maritime conditions e.g. offshore / vessels, UV radiation typically from the sun.

1

Technical data

Mechanical life V85	10 million operating cycles
Mechanical life VV85	20 million operating cycles
Supply voltage	see interface
Operation temperature	-40°C til + 60°C
Degree of protection	IP 54
Functional safety	PLd (EN ISO 13849) possible

Example

VV85	S8	P	T	- Z	+ R	- B	- E...	- X

Basic unit

V85.1	1-axis
V85	2-axis
	Reinforced version
VV85.1	1-axis
VV85	2-axis

Control-handle extended

	Standard 160 mm
S5	-20 mm
S8	+20 mm

**Only available in combination with handle!*

Gate

P	Cross gate
P X	Special gate

Grip / palm grip

	Knob *(included in basic unit!)*
	Knob with Mechanical zero interlock
T	Dead man
H	Signal button
D	Push button
B...	Palm grip B... *(see page palm grip 128)*

Axis 1

Z	Spring return
R	Friction brake only possible with VV85!

Axis 2 (not applicable to V/VV85.1)

Z	Spring return
R	Friction brake only possible with VV85!

Cover housing

B	Cover housing *(included in basic unit!)*

Interface *(description see on the following pages)*

E0xx	Switching output
E1xx	Voltage output
E2xx	Current output
E3xx	CAN-interface
E4xx	CANOpen Safety interface
E5xx	Profibus DP-interface
E6xx	Profinet
E7xx	Profinet Safe

Special model

X	Special / customer-specific

Technical details may vary based on configuration or application! Technical data subject to change without notice!

V2015/1 10.02.2015

Multi-axis controller
V85 / VV85

GESSMANN Industrial Controllers

Combination possibilities with our ball handles

1

Digital output

Supply voltage	9-32VDC
Current carrying capacity	Direction signal 150 mA
	Zero position signal 500 mA
Mounting depth A	85 mm
Wiring	Cable 500 mm long with plug connector (pins) CPC 17 - 14-pole

2 Direction signal + 1 zero position signal (galvanically isolated) per axis

1 axis	E001 1
2 axis	2

Voltage output (not stabilized)

Supply voltage	4,75-5,25VDC
Current carrying capacity	Direction signal 8 mA
Mounting depth A	85 mm
Wiring	Cable 500 mm long with plug connector (pins) CPC 17 - 14-pole

Characteristic: 1 = contra rotating, 2 = concurrently rotating

0,5...2,5...4,5V redundant + 2 direction signal per axis

1 axis	E104 1	☐
2 axis	2	☐

Voltage output

Supply voltage	9-32VDC (*11,5-32)
Current carrying capacity	Direction signal 150 mA
	Zero position signal 500 mA
Mounting depth A	85 mm
Wiring	Cable 500 mm long with plug connector (pins) CDC 17 - 14-pole
	Cable (for axis 3+4 or grip functions) 500 mm long with plug connector (socket) CPC 17 - 14-pole

Characteristic: 1 = contra rotating, 2 = concurrently rotating

0,5...2,5...4,5V redundant + 2 direction signal + 1 zero position signal (galvanically isolated) per axis

1 axis	E112 1	☐
2 axis	2	☐
3 axis*	3	☐
4 axis*	4	☐

Technical details may vary based on configuration or application! Technical data subject to change without notice!

1

0...5...10V redundant + 2 direction signal + 1 zero position signal (galvanically isolated) per axis, supply voltage 11,5 - 32VDC			
	1 axis	E132 1	☐
	2 axis	2	☐
	3 axis*	3	☐
	4 axis*	4	☐
10...0...10V redundant + 2 direction signal + 1 zero position signal (galvanically isolated) per axis, supply voltage 11,5 - 32VDC, sensor redundant, 1 output with signal monitoring			
	1 axis	E136 1	
	2 axis	2	
	3 axis*	3	
	4 axis*	4	

Current output

Supply voltage	9-32VDC
Current carrying capacity	Direction signal 150 mA
	Zero position signal 500 mA
Mounting depth A	85 mm
Wiring	Cable 500 mm long with plug connector (pins) CDC 17 - 14-pole
	2. Cable (for axis 3+4 or grip functions) 500 mm long with plug connector (socket) CPC17 - 14-pole

0...10...20 mA redundant + 2 direction signal + 1 zero position signal (galvanically isolated) per axis, sensor redundant, 1 output with signal monitoring		
1 axis	E206 1	
2 axis	2	
3 axis*	3	
4 axis*	4	
20...0...20 mA redundant + 2 direction signal + 1 zero position signal (galvanically isolated) per axis, sensor redundant, 1 output with signal monitoring		
1 axis	E208 1	
2 axis	2	
3 axis*	3	
4 axis*	4	
4...12...20 mA redundant + 2 direction signal + 1 zero position signal (galvanically isolated) per axis, sensor redundant, 1 output with signal monitoring		
1 axis	E214 1	
2 axis	2	
3 axis*	3	
4 axis*	4	
20...4...20 mA redundant + 2 direction signal + 1 zero position signal (galvanically isolated) per axis, sensor redundant, 1 output with signal monitoring		
1 axis	E216 1	
2 axis	2	
3 axis*	3	
4 axis*	4	

**Axis for handel functions, interface can vary depending upon actuation element!*

Voltage output with other value on request!

Technical details may vary based on configuration or application! Technical data subject to change without notice!

V2015/1 10.02.2015

CAN			
Supply voltage	9-36VDC		
Idle current consumption	120 mA		
Mounting depth A	85 mm (Expansion stage 1)		
	85 mm (Expansion stage 2)		
	85 mm (Expansion stage 3)		
	100 mm (Expansion stage 4)		
Protocol	CANopen CiA DS 301 or SAE J 1939		
Bautrate	125 kBit/s til 1 Mbit/s		
Output value	0...128...255		
Wiring	CAN (IN) cable 500 mm with plug connector M12 (pins)		
	CAN (OUT) cable 500 mm with plug connector M12 (socket)		
	External in-/outputs cable 500 mm with plug connector CPC 23-37 (socket)		
CAN Expansion stage 1		E304 1	☐
- 3 analog joystick axis			
- 14 digital joystick functions			
or 10 digital joystick functions + 4 LED-outputs			
CAN Expansion stage 2		E305 1	☐
- 5 analog joystick axis			
- 14 digital joystick functions			
- Input for capacitive sensor			
**external LED-outputs can be used in the grip for LED`s*			
with additional external in-/outputs			
- 4 external LED-outputs, 8 external digital inputs		2	☐
CAN Expansion stage 3		E306 1	☐
- 8 analog joystick axis			
- 14 digital joystick functions			
- Input for capacitive sensor			
**external LED-outputs can be used in the grip for LED`s*			
with additional external in-/outputs			
- 8 external LED-outputs, 8 external digital inputs		2	☐
- 8 external LED-outputs, 16 external digital inputs		3	☐
- 24 external digital inputs		4	☐
- 8 external LED-outputs, 24 external digital inputs		5	☐
CAN Expansion stage 4		E307 1	☐
- 9 analog joystick axis			
- 14 digital joystick functions			
- 2 inputs für capacitive sensor			
**external LED-outputs can be used in the grip for LED`s*			
with additional external in-/outputs			
- 8 external LED-outputs, 8 external digital inputs		2	☐
- 8 external LED-outputs, 16 external digital inputs		3	☐
- 24 external digital inputs		4	☐
- 8 external LED-outputs, 24 external digital inputs		5	☐
with additional signals separately wired (not CAN)			☐

Technical details may vary based on configuration or application! Technical data subject to change without notice!

1

CANOpen Safety			
Supply voltage	9-36VDC		
Idle current consumption	120 mA		
Mounting depth A	85 mm (Expansion stage 1)		
	85 mm (Expansion stage 2)		
	85 mm (Expansion stage 3)		
	100 mm (Expansion stage 4)		
Protocol	CAN Safety CIA 304		
Bautrate	125 kBit/s til 1 MBit/s		
Output value	0...128...255		
Wiring	CAN (IN) cable 500 mm with plug connector M12 (pins)		
	CAN (OUT) cable 500 mm with plug connector M12 (socket)		
	External in-/outputs cable 500 mm with plug connector CPC 23-37 (socket)		
CANOpen Safety expansion stage 1		E404 1	☐
- 3 analog joystick axis			
- 14 digital joystick functions			
or 10 digital joystick functions + 4 LED-outputs			
CANOpen Safety expansion stage 2		E405 1	☐
- 5 analog joystick axis			
- 14 digital joystick functions			
- Input for capacitive sensor			
**external LED-outputs can be used in the grip for LED`s*			
with additional external in-/outputs			
- 4 external LED-outputs, 8 external digital inputs		2	☐
CANOpen Safety expansion stage 3		E406 1	☐
- 8 analog joystick axis			
- 14 digital joystick functions			
- Input for capacitive sensor			
** external LED-outputs can be used in the grip for LED`s*			
with additional external in-/outputs			
- 8 external LED-outputs, 8 external digital inputs		2	☐
- 8 external LED-outputs, 16 external digital inputs		3	☐
- 24 external digital inputs		4	☐
- 8 external LED-outputs, 24 external digital inputs		5	☐
CANOpen Safety expansion stage 4		E407 1	☐
- 9 analog joystick axis			
- 14 digital joystick functions			
- Input for capacitive sensor			
**external LED-outputs can be used in the grip for LED`s*			
with additional external in-/outputs			
- 8 external LED-outputs, 8 external digital inputs		2	☐
- 8 external LED-outputs, 16 external digital inputs		3	☐
- 24 external digital inputs		4	☐
- 8 external LED-outputs, 24 external digital inputs		5	☐
with additional signals separately wired (not CAN)			
- 2 direction signal + 1 zero position signal (potential free) per main-axis			3

Technical details may vary based on configuration or application! Technical data subject to change without notice!

V2015/1 10.02.2015

Profibus DP			
Supply voltage	18-30VDC		
Bautrate	til 12MBit/s		
Output value	0...128...255		
Mounting depth A	100 mm		
Wiring	Profibus, cable 100 mm with plug connector D-Sub 9		
	Power supply (contact wiring) cable 500 mm with plug connector CPC 13-9 (pins)		
	external in-/outputs, cable 500 mm with plug connector CPC 23-37 (socket)		
Profibus DP		E501 1	☐
- 4 analog joystick axis			
- 16 digital joystick functions			
- Input for capacitive sensor			
**external LED-outputs can be used in the grip for LED`s*			
with additional external in-/outputs			
- 8 external LED-outputs, 8 external digital inputs		2	☐
- 16 external LED-outputs, 16 external digital inputs		3	☐
with additional contact equipment separately wired (not profibus)			
- 2 direction contact + 1 zero position contact (not potential-free) per main-axis			1
- 1 zero position contact (potential free) per main-axis			2

Profinet			
Supply voltage	18-30VDC		
Bautrate	til 12MBit/s		
Output value	0...128...255		
Mounting depth A	100 mm		
Wiring	Profinet (IN), cable 300 mm with M12 plug connector (socket)		
	Profinet (OUT), cable 300 mm with M12 plug connector (socket)		
	Power supply (contact wiring) cable 500 mm with plug connector CPC 13-9 (pins)		
	External in-/outputs, cable 500 mm with plug connector CPC 23-37 (socket)		
Profinet		E601 1	☐
- 4 analog joystick axis			
- 16 digital joystick functions			
- Input for capacitive sensor			
**external LED-outputs can be used in the grip for LED`s*			
with with additional external in-/outputs			
- 8 external LED-outputs, 8 external digital inputs		2	☐
- 16 external LED-outputs, 16 external digital inputs		3	☐
with additional signals separately wired (not with profinet)			
- 2 direction signal + zero position signal (potential free) per main-axis			3

Technical details may vary based on configuration or application! Technical data subject to change without notice!

1

Profinet Safe			
Supply voltage	18-30VDC		
Bautrate	til 12 MBit/s		
Output value	0...128...255		
Mounting depth A	100 mm		
Wiring	Profinet (IN), cable 300 mm with M12 plug connector (socket)		
	Profinet (OUT), cable 300 mm with M12 plug connector (socket)		
	Power supply (contact wiring) cable 500 mm with plug connector CPC 13-9 (pins)		
	External in-/outputs, cable 500 mm with plug connector CPC 23-37 (socket)		
- 4 analog joystick axis		E701 1	☐
- 16 digital joystick functions			
- Input for capacitive sensor			
**external LED-outputs can be used in the grip for LED`s*			
with with additional external in-/outputs			
- 8 external LED-outputs, 8 external digital inputs		2	☐
- 16 external LED-outputs, 16 external digital inputs		3	☐
with additional signals separately wired (not with profinet safe)			
- 2 direction signal + zero position signal (potential free) per main-axis			☐

Other outputs			
Voltage output for PVG32 0,25...0,5...0,75Us, power supply 12 VDC			
Wiring:	Cable 500 mm long with plug CPC 17-14 (pins)		
	1 axis	E902 1	☐
	2 axis	2	☐
	3 axis	3	☐
	4 axis	4	☐
with additional direction contacts per main-axis			☐
Voltage output for PVG32 0,25...0,5...0,75Us, power supply 12 VDC			
Wiring:	Cable 500 mm long with plug CPC 17-14 (pins)		
	1 axis	E906 1	☐
	2 axis	2	☐
	3 axis	3	☐
	4 axis	4	☐
with additional direction contacts per main-axis			☐
8 Bit Gray-Code with direction signals per main-axis, supply voltage 9-36 VDC			
Wiring:	1 Cable 500 mm with plug CPC 23-37 (socket) axis 1-2		
	1 Cable 500 mm with plug CPC 23-37 (socket) axis 3-4		
	1 axis	E903 1	
	2 axis	2	
	3 axis	3	
	4 axis	4	

8 Bit Binär-Code with direction signals per main-axis, supply voltage 9-36 VDC			
Wiring:	1 Cable 500 mm with plug CPC 23-37 (socket) axis 1-2		
	1 Cable 500 mm with plug CPC 23-37 (socket) axis 3-4		
		1 axis	E904 1
		2 axis	2
		3 axis	3
		4 axis	4

Special model	
Mating connector AMP CPC 17 14-pole (male insert)	5300000209
Mating connector AMP CPC 17 14-pole (male insert) with 2 m cable	5300000210
Mating connector AMP CPC 17 14-pole (socket contact)	5300000211
Mating connector AMP CPC 17 14-pole (socket contact) with 2 m cable	5300000213
Mating connector AMP CPC 23 37-pole (male insert)	5300000214
Mating connector AMP CPC 23 37-pole (male insert) with 2 m cable	5300000215
Mating connector AMP CPC 23 37-pole (socket contact)	5300000216
Mating connector AMP CPC 23 37-pole (socket contact) with 2 m cable	5300000217
Mating connector (CAN) M12 (male insert) with 2 m cable	20201140
Mating connector (CAN) M12 (socket contact) with 2 m cable	20202298
Mating connector (Profibus) straight	22201440
Mating connector (Profibus) 90° angled	22201741
Mating connector (Profinet IN) M12 (male insert) with 2 m cable	5300000222
Mating connector (Profinet OUT) M12 (male insert) with 2 m cable	5300000223

Technical details may vary based on configuration or application! Technical data subject to change without notice!

GESSMANN Industrial Controllers

1

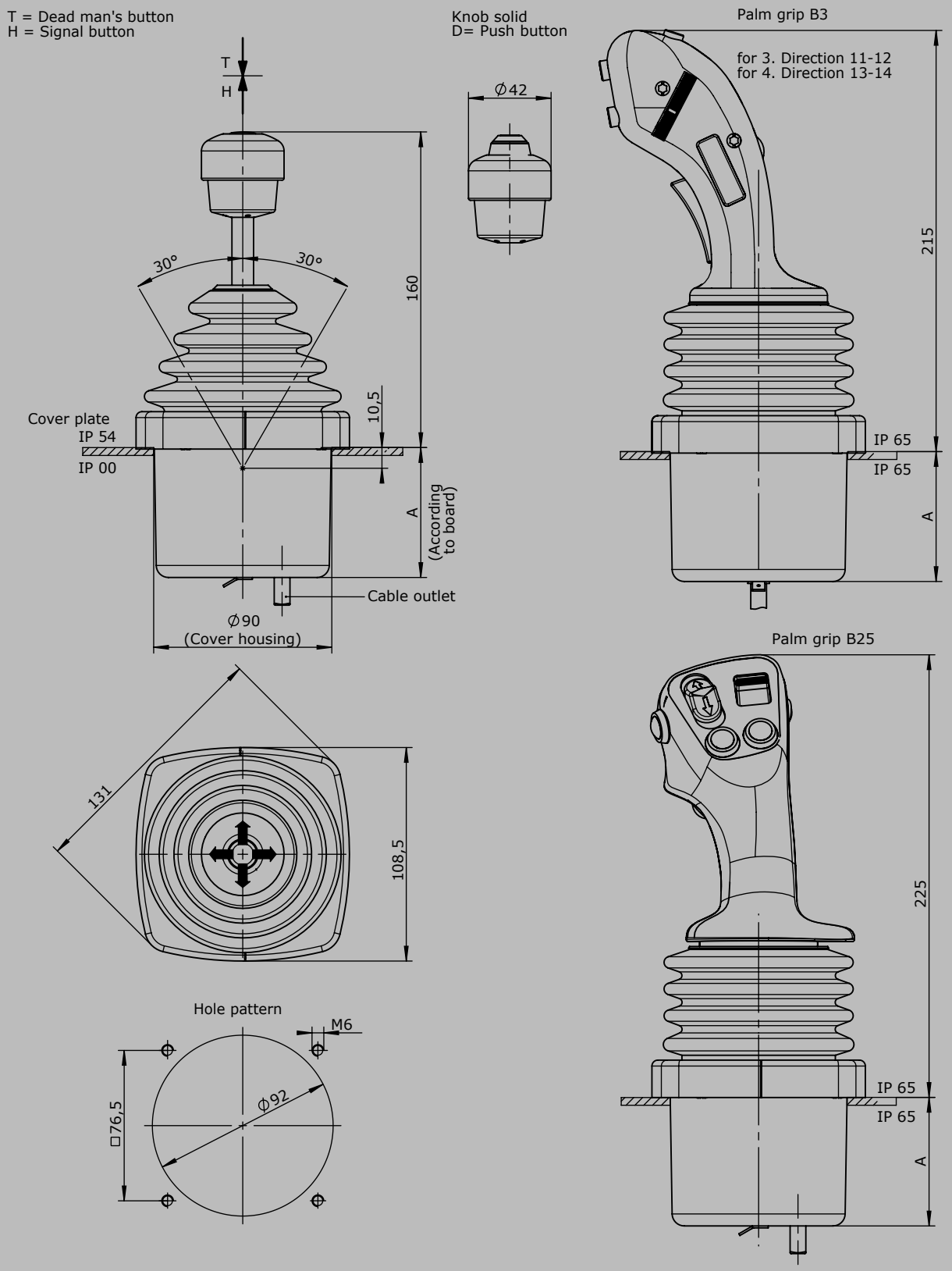

Technical details may vary based on configuration or application! Technical data subject to change without notice!

V2015/1 10.02.2015

Multi-axis controller
V24

GESSMANN Industrial Controllers

The association drive V24 is designed as a driving joystick for construction and agricultural machinery. It has a parking position which can be inserted in the zero position. The V24 is characterized by its extremely rugged design.
Through it`s various interfaces and the many possibilities of combination with our numerous ball handles the V24 is very flexible.

Technical data

Mechanical life V24	20 million operating cycles
Supply voltage	see interface
Operation temperature	-40°C til +60°C
Degree of protection	IP 54
Functional safety	PLd (EN ISO 13849) possible

1

Example

V24	P1	T	- R	- E...	- X

Basic unit

V24.1	Multi-axis controller, 1-axis
V24L	Multi-axis controller, 1-axis with parking position left
V24R	Multi-axis controller, 1-axis parking position right

Gate

P1	T-gate main axis axial *(included in basic unit!)*
P2	T-gate main axis right outside
P3	T-gate main axis left outside
PX	Special gate

Grip / Palm grip

	Knob *(included in basic unit!)*
T	Dead man
H	Signal button
D	Push button
B...	Palm grip B... *(see page palm grip 128)*

Main axis

R	Friction brake adjustable *(included in basic unit!)*

Interface *(description see on the following pages)*

E3xx	CAN-interface
E4xx	CANOpen Safety interface

Special model

X	Special / customer-specific

Technical details may vary based on configuration or application! Technical data subject to change without notice!

Multi-axis controller
V24

GESSMANN Industrial Controllers

Combination possibilities with our ball handles

B1 S. 128	B2 S. 130	B3 S. 132	B5 S. 135	B6 S. 137	B7 B8 S. 139	B9 S. 141	B10 S. 143	B14 B15 S. 145
B20 S. 147	B22 S. 149	B23 S. 151	B24 S. 153	B25 S. 155	B28 S. 157	B29 S. 159		

1

CAN	
Supply voltage	9-36VDC
Idle current consumption	120 mA
Mounting depth A	60 mm
Protocol	CANopen CiA DS 301 or SAE J 1939
Bautrate	125 kBit/s til 1 Mbit/s
Output value	0...128...255
Wiring	CAN (IN) cable 500 mm with plug connector M12 (pins)
	CAN (OUT) cable 500 mm with plug connector M12 (socket)
	Digital-/analog outputs cable 500 mm with plug connector CPC 17-14 (socket)

CAN V24	E308 1	☐
- 5 analog joystick axis		
- 22 digital joystick functions		
or 18 digital joystick functions + 8 LED-outputs		
- Input for capacitive sensor		
with additional digital-/ analog outputs for the main axis		
- 2 direction signals + 1 zero position signal (potential free) per axis		1
- 0,5...2,5...4,5V redundant contra rotating + 2 direction signals + 1 zero position signal (galvanically isolated) direction 1-2 and 2 direction signals + 1 zero position signal (galvanically isolated) direction 3-4		2
- 0,5...2,5...4,5V redundant contra rotating + 2 direction signals + 1 zero position signal (galvanically isolated) direction 1-2 and 0,5...2,5...4,5V redundant contra rotating direction 3-4		3
- 4...12...20mA redundant contra rotating + 2 direction signals + 1 zero position signal (galvanically isolated) direction 1-2 and 2 direction signals + 1 zero position signal (galvanically isolated) direction 3-4		4
- 4...12...20mA redundant contra rotating + 2 direction signals + 1 zero position signal (galvanically isolated) direction 1-2 and 4...12...20mA redundant contra rotating direction 3-4		5

CANOpen Safety	
Supply voltage	9-36VDC
Idle current consumption	120 mA
Mounting depth A	60 mm
Protocol	CANOpen Safety CIA 304
Bautrate	125 kBit/s til 1 Mbit/s
Output value	0...128...255
Wiring	CAN (IN) cable 500 mm with plug connector M12 (pins)
	CAN (OUT) cable 500 mm with plug connector M12 (socket)
	Digital-/ analog outputs cable 500 mm with plug connector CPC 17-14 (socket)

CANOpen Safety V24 - 5 analog joystick axis - 14 digital joystick functions or 10 digital joystick functions + 4 LED-outputs - Input for capacitive sensor	E408 1	☐
with additional digital-/ analog outputs for the main axis		
- 2 direction signals + 1 zero position signal (potential free) per axis		1
- 0,5...2,5...4,5V redundant contra rotating + 2 direction signals + 1 zero position signal (galvanically isolated) direction 1-2 and 2 direction signals + 1 zero position signal (galvanically isolated) direction 3-4		2
- 0,5...2,5...4,5V redundant contra rotating + 2 direction signals + 1 zero position signal (galvanically isolated) direction 1-2 and 0,5...2,5...4,5V redundant contra rotating direction 3-4		3
- 4...12...20mA redundant contra rotating + 2 direction signals + 1 zero position signal (galvanically isolated) direction 1-2 and 2 direction signals + 1 zero position signal (galvanically isolated) direction 3-4		4
- 4...12...20mA redundant contra rotating + 2 direction signals + 1 zero position signal (galvanically isolated) direction 1-2 and 4...12...20mA redundant contra rotating direction 3-4		5

Special model	
Mating connector AMP CPC 17 14-pole (male insert)	5300000209
Mating connector AMP CPC 17 14-pole (male insert) with 2 m cable	5300000210
Mating connector (CAN) M12 (male insert) with 2 m cable	20201140
Mating connector (CAN) M12 (socket contact) with 2 m cable	20202298

GESSMANN Industrial Controllers

1

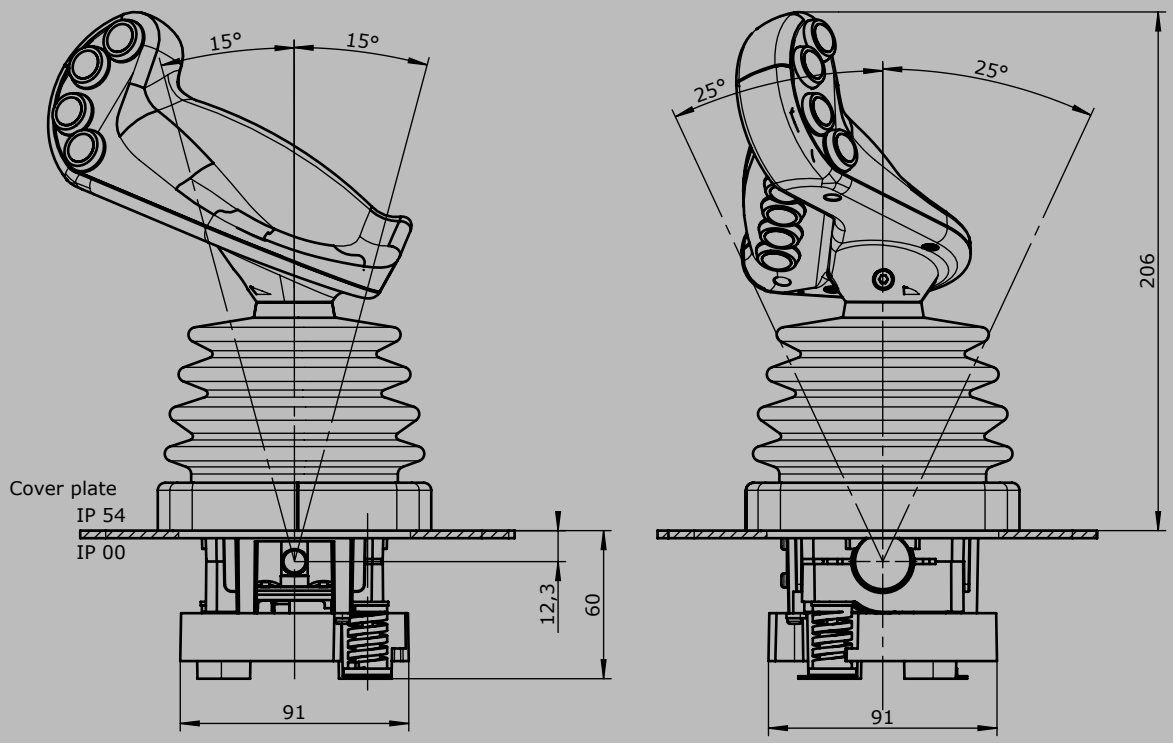

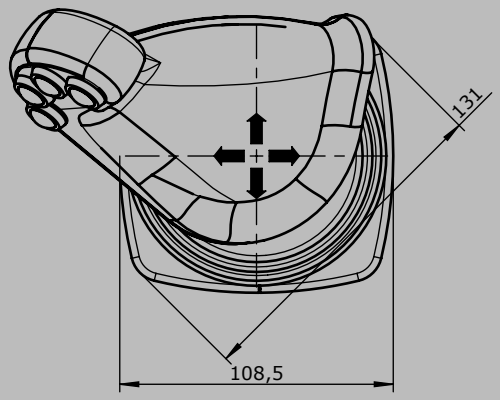

Hole pattern

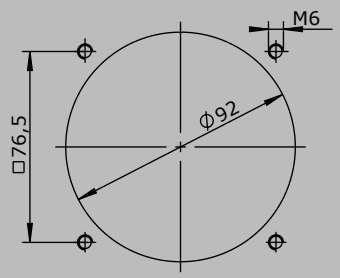

Technical details may vary based on configuration or application! Technical data subject to change without notice!

V2015/1 10.02.2015

Multi-axis controller
V25

GESSMANN Industrial Controllers

The multi-axis controller V25 is available in either single-axis or multi-axis options and is a robust controller used commonly in electro-hydraulic applications.
With many output options including voltage, amperage and switching contacts and many handle options the V25 series is hugly customisable.
The V25 is resistant to oil, maritime conditions e.g. offshore / vessels, UV radiation typically from the sun.

1

Technical data

Mechanical life V25	8 million operating cycles
Supply voltage	see interface
Operation temperature	-40°C til +60°C
Degree of protection	IP 54
Functional safety	PLd (EN ISO 13849) possible

Example

V25	S8	P	T	- Z	- B	- E...	- X

Basic unit

V25.1	1-axis
V25	2-axis

Control-handle long

	Standard 100 mm
S8	+20 mm
*Only available in combination with handle!	

Gate

P	Cross gate

Grip / palm grip

	Knob *(included in basic unit!)*
M	Mechanical zero interlock
T	Knob with dead man
H	Knob with signal button
D	Knob with push button KDA/70
B ...	Palm grip B... *(see page palm grip 128)*

Spring return *(includet in basic unit!)*

Z	Spring return

Cover housing *(description see page 161)*

B	Cover housing

Interface *(description see on the following page)*

E0xx	Switching output
E1xx	Voltage output
E2xx	Current output
E3xx	CAN-interface
E4xx	CANOpen Safety interface

Special model

X	Special / customer-specific

Technical details may vary based on configuration or application! Technical data subject to change without notice!

Multi-axis controller
V25

GESSMANN Industrial Controllers

Combination possibilities with our ball handles

B1 S. 128	B2 S. 130	B3 S. 132	B5 S. 135	B6 S. 137	B7 B8 S. 139	B9 S. 141	B10 S. 143	B14 B15 S. 145
B20 S. 147	B22 S. 149	B23 S. 151	B24 S. 153	B25 S. 155	B28 S. 157	B29 S. 159		

1

Digital output			
Supply voltage	9-32VDC		
Current carrying capacity	Direction signal 150 mA		
	Zero position signal 500 mA		
Wiring	Cable 500 mm long with plug connector (pins) CPC 17 - 14-pole		
2 Direction signal + 1 zero position signal (galvanically isolated) per axis			
	1 axis	E001 1	

Voltage output (not stabilized)			
Supply voltage	4,75-5,25VDC		
Current carrying capacity	Direction signal 8 mA		
Mounting depth A	60 mm		
Wiring	Cable 500 mm long with plug connector (pins) CPC 17 - 14-pole		
	Characteristic: 1= contra rotating, 2= concurrently rotating		
0,5...2,5...4,5V redundant + 2 direction signal per axis			
	1 axis	E104 1	☐

Voltage output			
Supply voltage	9-32VDC (*11,5-32V)		
Current carrying capacity	Direction signal 150 mA		
	Zero position signal 500 mA		
Wiring	Cable 500 mm long with plug connector (pins) CPC 17 - 14-pole		
	Characteristic: 1= contra rotating, 2= concurrently rotating		
0,5...2,5...4,5V redundant + 2 direction signal + 1 zero position signal (galvanically isolated) per axis			
	1 axis	E112 1	☐
	2 axis	2	☐
	3 axis*	3	☐
	4 axis*	4	☐
0...5...10V redundant + 2 direction signal + 1 zero position signal (galvanically isolated) per axis, supply voltage 11,5 - 32VDC			
	1 axis	E132 1	☐
	2 axis	2	☐
	3 axis*	3	☐
	4 axis*	4	☐

Technical details may vary based on configuration or application! Technical data subject to change without notice!

V2015/1 10.02.2015

10...0...10V redundant + 2 direction signal + 1 zero position signal (galvanically isolated) per axis, supply voltage 11,5 - 32VDC, sensor redundant, 1 output with signal monitoring		
	1 axis	E136 1
	2 axis	2
	3 axis *	3
	4 axis *	4
*Axis for grip functions, interfaces may vary depending upon actuation element!		
Voltage output with other value on request!		

Current output

Supply voltage	9-32VDC
Current carrying capacity	Direction signal 150 mA
	Zero position signal 500 mA
Mounting depth A	60 mm
	75 mm (from 3 axis)
Wiring	Cable 500 mm long with plug connector (pins) CPC 17 - 14-pole
	2. cable (for axis 3+4 or grip functions) 500 mm long with plug connector (socket) CPC 17 - 14-pole

0...10...20mA redundant + 2 direction signal + 1 zero position signal (galvanically isolated) per axis, sensor redundant, 1 output with signal monitoring		
	1 axis	E206 1
	2 axis	2
	3 axis*	3
	4 axis*	4
20...0...20mA redundant + 2 direction signal + 1 zero position signal (galvanically isolated) per axis, sensor redundant, 1 output with signal monitoring		
	1 axis	E208 1
	2 axis	2
	3 axis*	3
	4 axis*	4
4...12...20mA redundant + 2 direction signal + 1 zero position signal (galvanically isolated) per axis, sensor redundant, 1 output with signal monitoring		
	1 axis	E214 1
	2 axis	2
	3 axis*	3
	4 axis*	4
20...4...20mA redundant + 2 direction signal + 1 zero position signal (galvanically isolated) per axis, sensor redundant, 1 output with signal monitoring		
	1 axis	E216 1
	2 axis	2
	3 axis*	3
	4 axis*	4
*Axis for grip functions, interfaces may vary depending upon actuation element!		
Voltage output with other value on request!		

Identification of the installation variants with switching directions:

V25.1

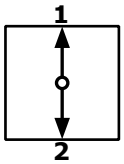

V25

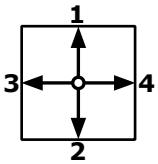

1

CAN			
Supply voltage	9-36VDC		
Idle current consumption	120 mA		
Mounting depth A	60 mm (Expansion stage 1)		
	75 mm (Expansion stage 2)		
	95 mm (Expansion stage 3)		
Protocol	CANopen CiA DS 301 or SAE J 1939		
Bautrate	125 kBit/s til 1 Mbit/s		
Output value	0...128...255		
Wiring	CAN (IN) cable 500 mm with plug connector M12 (pins)		
	CAN (OUT) cable 500 mm with plug connector M12 (socket)		
	External in-/outputs cCable 500 mm with plug connector CPC 23-37 (socket)		
CAN expansion stage 1		E301 1	☐
- 3 analog joystick axis			
- 14 digital joystick functions			
or 11 digital Joystick functions + 4 LED-outputs			
CAN expansion stage 2		E302 1	☐
- 6 analog joystick axis			
- 14 digital joystick functions			
- Input for capacitive sensor			
**external LED-outputs can be used in the grip for LED`s*			
with additional external in-/outputs			
- 4 external LED-outputs, 16 external digital inputs		2	☐
CAN expansion stage 3		E303 1	☐
- 9 analog joystick axis			
- 14 digital joystick functions			
- 2 inputs für capacitive sensor			
**external LED-outputs can be used in the grip for LED`s*			
with additional external in-/outputs			
- 8 external LED-outputs, 8 external digital inputs		2	☐
- 8 external LED-outputs, 16 external digital inputs		3	☐
- 24 external digital inputs		4	☐
with additional contact equipment separately wired (not CAN)			
- 2 direction contact + 1 zero position contact (not potential-free) per axis			1
- 1 zero position contact (potential free) per axis			2

CANOpen Safety	
Supply voltage	9-36VDC
Idle current consumption	120 mA
Bautrate	125 kBit/s til 1MBit/s
Output value	0...128...255
Mounting depth	60 mm (Expansion stage 1)
	75 mm (Expansion stage 2)
	95 mm (Expansion stage 3)
Protocol	CANOpen Safety CIA 304
Wiring	CAN (IN) cable 500 mm with plug connector M12 (pins)
	CAN (OUT) cable 500 mm with plug connector M12 (socket)
	External in-/outputs cable 500 mm with plug connector (socket) CPC 23 37-pole

CANOpen Safety expansion stage 1	E401 1	☐
- 3 analog joystick axis		
- 14 digital joystick functions		
or 10 digital joystick functions + 4 LED-outputs		
CANOpen Safety expansion stage 2	E402 1	☐
- 6 analog joystick axis		
- 14 digital joystick functions		
- input for capacitive sensor		
**external LED-outputs can be used in the grip for LED`s*		
with additional external in-/outputs		
- 4 external LED-outputs, 16 external digital inputs	2	☐
CANOpen Safety expansion stage 3	E403 1	☐
- 9 analog joystick axis		
- 14 digital joystick functions		
- 2 inputs for capacitive sensor		
**external LED-outputs can be used in the grip for LED`s*		
with additional external in-/outputs		
- 8 external LED-outputs, 8 external digital inputs	2	☐
- 8 external LED-outputs, 16 external digital inputs	3	☐
- 24 external digital inputs	4	☐
with additional signals separately wired (not CAN)		
- 2 direction signals + 1 zero position signal (potential free) per axis		☐

Special model	
Mating connector AMP CPC 17 14-pole (male insert)	5300000209
Mating connector AMP CPC 17 14-pole (male insert) with 2 m cable	5300000210
Mating connector AMP CPC 17 14-pole (socket contact)	5300000211
Mating connector AMP CPC 17 14-pole (socket contact) with 2 m cable	5300000213
Mating connector AMP CPC 23 37-pole (male insert)	5300000214
Mating connector AMP CPC 23 37-pole (male insert) with 2 m cable	5300000215
Mating connector M12 male insert with 2 m cable	20201140
Mating connector M12 female insert with 2 m cable	20202298

Technical details may vary based on configuration or application! Technical data subject to change without notice!

1

T = Dead man's button
H = Signal button
M = Latch for mechanical zero interlock

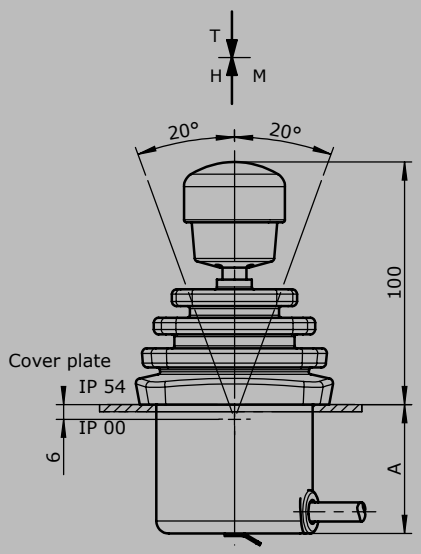

Palm grip B1

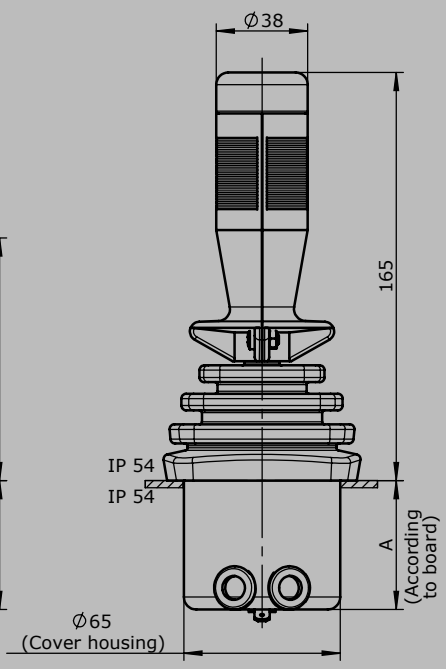

Palm grip B3

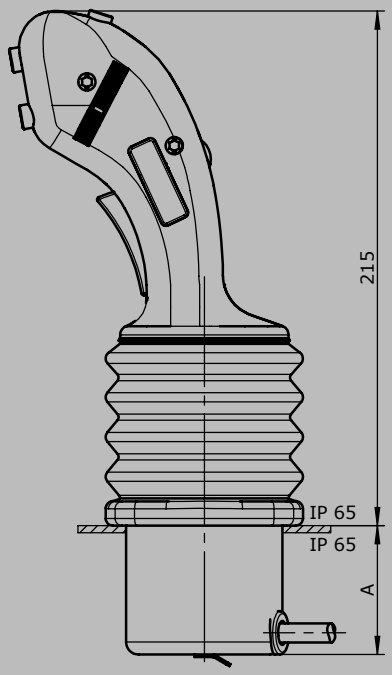

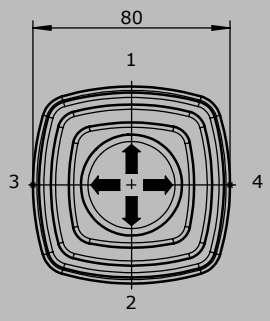

Palm grip B25

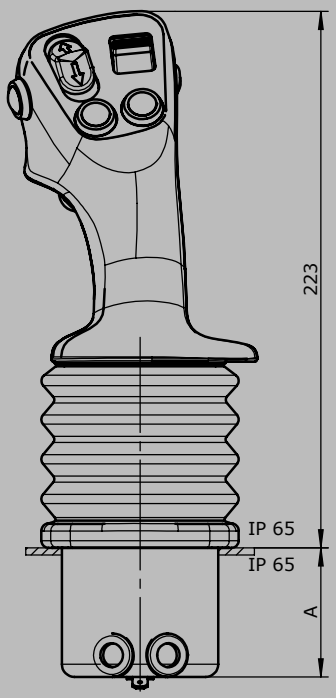

Hole pattern

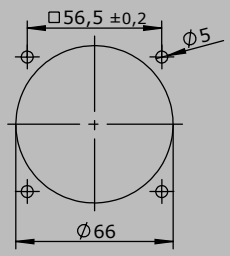

Technical details may vary based on configuration or application! Technical data subject to change without notice!

V2015/1 10.02.2015

Multi-axis controller
V14

GESSMANN Industrial Controllers

The multi-axis controller V14 is a robust switching device for remote control and eletro-hydraulic applications.
The modular design enables the switching device to be used universally.
The V14 is resistant to oil, maritime conditions e.g. offshore / vessels, UV radiation typically from the sun.

Technical data

Mechanical life V14	6 million operating cycles
Operation temperature	-40°C til +60°C
Degree of protection	IP 65

Example

V14L	S8	P	T	- 01 Z C	+ 03 R	- A05 C61	+ A110	- X

Basic unit

V14L 2-axis left

Control-handle extended

Standard

S8 +20 mm

**Only available in combination with handle!*

Gate

P Cross gate

Grip / Palm grip

T Dead man

Axis 1 (direction 1-2)

01 2 contacts (2A 250V AC15)

Z Spring return

C Mechanical encoder

Axis 2 (direction 3-4)

03 6 contacts (2A 250V AC15)

R Friction brake

Description axis 1 (direction 1-2)

A05 Arrangement MSP 21

C61 Mechanical encoder MEC 1-2

Description axis 2 (direction 3-4)

A110 Arrangement MS 24-0

Special model

X Special / customer-specific

Technical details may vary based on configuration or application! Technical data subject to change without notice!

Multi-axis controller
V14

GESSMANN Industrial Controllers

Combination possibilities with our ball handles

1

V14L	S8	P	T	-	01 Z C	+	03 R	-	A05	C61	+	A110	-	X

Basic unit

V14.1L	1-axis left
V14.1R	1-axis right
V14L	2-axis left
V14R	2-axis right

Control-handle extended

	Standard
S8	+20 mm

Gate

P	Cross gate
P X	Special gate

Grip / palm grip

	Knob 25 mm (standard)
M	Mechanical zero interlock
MH	Mechanical zero interlock + signal contact
T	Dead man
H	Signal button
GK1	Knob 42 mm
GK1M	Mechanical zero interlock
GK1MN	Mechanical zero interlock (push down)
GK1T	Dead man
GK1H	Signal button
GK1MH	Mechanical zero interlock + signal contact
GK1D	Push button
GK1DV	Flush push button
GSP	Twist grip 2x5 kOhm + direction tracks Imax= 1 mA
B...	Palm grip B... *(see page palm grip 128)**

Identification of the installation variants with switching directions:

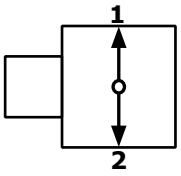

V14.1L

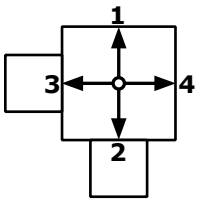

V14L

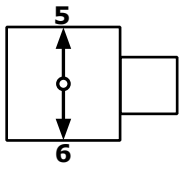

V14.1R

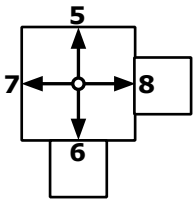

V14R

**Attention! The multi-axis controller V14 is not suitable for large palm grips (B3, B7/B8,B9...)*

V14L	S8	P	T	-	01 Z C	+	03 R	-	A05	C61	+	A110	-	X

Axis 1: direction 1-2 left / direction 5-6 right

(Standard contacts gold-plated 2A 250V AC15)

01	2 contacts	Standard contact - arrangement see page 106	
02	4 contacts	z.B.	
03	6 contacts	A05	MS 21
		A0500	MS 21-00
		A110	MS 24-0
		A99 contact - arrangement according customer request	

Technical details may vary based on configuration or application! Technical data subject to change without notice!

V2015/1 10.02.2015

V14L	S8	P	T	-	01 Z C	+	03 R	-	A05	C61	+	A110	-	X

Z	Spring return *(included in basic unit!)*		
R	Friction brake		
C	Mechanical encoder		
	C61	MEC 1-2	
		EA/02-10	I max. 1 mA
		Potentiometer track	2x10 kOhm
		Direction tack	Arrangement MS 26-0
	C62	MEC 1-7	
		EA/10-10	I max. 1 mA
		Potentiometer track	2x5 kOhm
		Direction track	Arrangement MS 26-0-1
	C66	MEC 1-10	
		EA/17-10	I max. 10 mA
		Potentiometer track	2x1,5 kOhm
		Direction track	Arrangement MS 21-0+MS21
	C63	MEC 1-6	
		EA/09-10	
		6 Bit Gray Code	
	C64	MEC 1-6-5	
		ER/36-10	Us=18-30V
		Current output 20...4...20mA	
	C65	MEC 1-6-8	
		ER/36-12	Us=18-30V
		Current output 20...0...20mA	
	C67	MEC 1-6-9	
		ER/36-11	Us=18-30V
		Voltage output 10...0...10V	
	Potentiometer on request!		

If both axis identical, it`s enough to describe one axis!
Beispiel: ...A05C61 + A05C61 => A05C61

V14L	S8	P	T	-	01Z C	+	03 R	-	A05 C61	+	A110	-	X

Axis 2: direction 3-4 left / direction 7-8 right *(not applicable to V14.1L and V14.1R)*

See describtion axis 1!

Special model

X Special / customer-specific

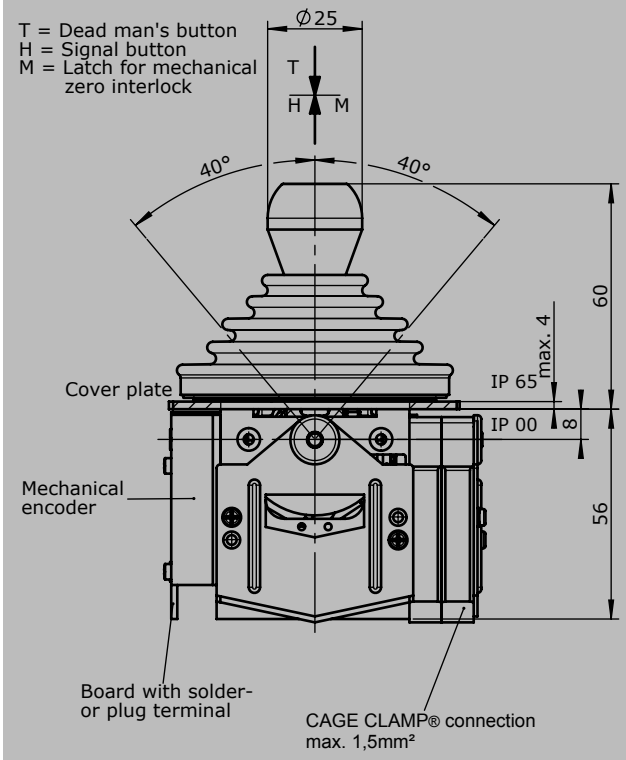

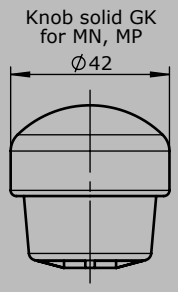

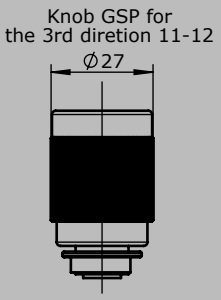

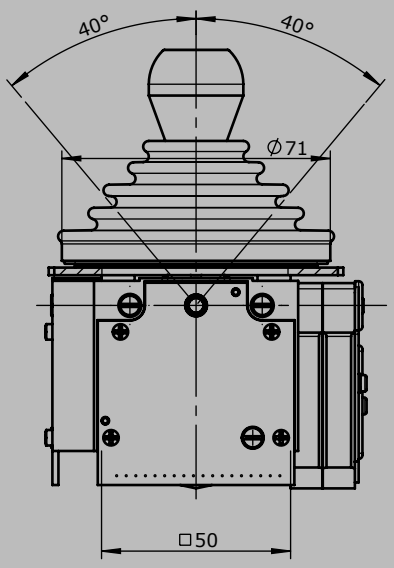

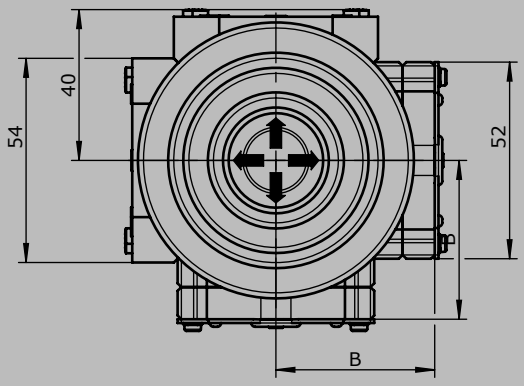

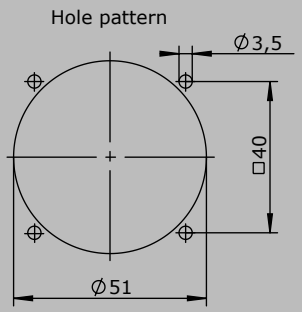

Type	No. of contacts	Dim. B
01	2	36
02	4	45
03	6	54

Technical details may vary based on configuration or application! Technical data subject to change without notice!

V2015/1 10.02.2015

Multi-axis controller
V20

GESSMANN Industrial Controllers

The multi-axis controller V20 is a rugged switching device for remote control.
The multi-axis controller is resistant to oil, maritime conditions e.g. offshore / vessels, UV radiation typically from the sun.

Technical data

Mechanical life V20	3 million operating cycles
Operation temperature	-40°C til +60°C
Degree of protection	IP 65

Example

		V20	- P	D	- C71	+ C71	- B	- X
Basic unit								
V20.1	1-axis with spring return							
V20	2-axis with spring return							
V20.1A	1-axis with spring return, IP 67 front							
V20A	2-axis with spring return, IP 67 front							
Gate								
p	Cross gate							
P X	Special gate							
Grip								
	Knob (standard)							
D	Push button							
GSP	Rotation grip 2x5 kOhm + direction tracks Imax= 1mA							
Axis 1: direction 1-2								
C70	Mechanical encoder							
	MEC 2-1							
	EA/15-10	l max. 1 mA						
	Potentiometer track	2x5 kOhm						
	Direction track	Arrangement MS 224-0						
C71	Mechanical encoder							
	MEC 2-2							
	EA/11-10	l max. 1 mA						
	Potentiometer track	2x5 kOhm						
	Direction track	Arrangement MS 24-0						
C72	Mechanical encoder							
	MEC 2-5							
	EA/21-10	l max. 1 mA						
	Potentiometer track	2x5 kOhm						
	Direction track	Arrangement MS 25-0						
Axis 2: direction 3-4								
See description axis 1!								
Cover housing								
B	Cover housing KBQ 905 (IP 65)							
Special model								
X	Special / customer-specific							

Technical details may vary based on configuration or application! Technical data subject to change without notice!

1

V20 Standard degree of protection front IP 65

Knob solid

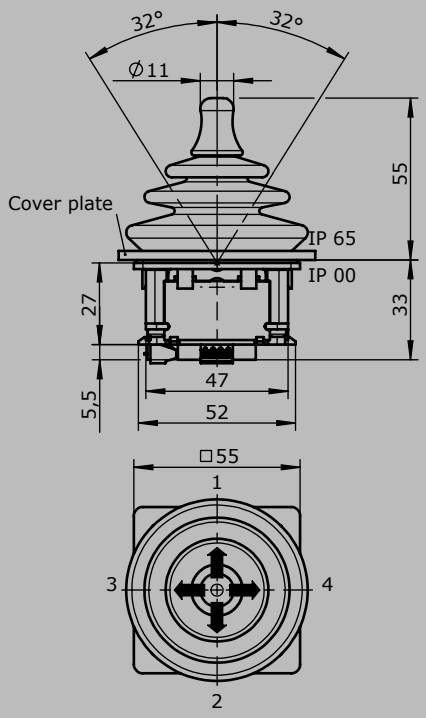

Knob solid
with Push button

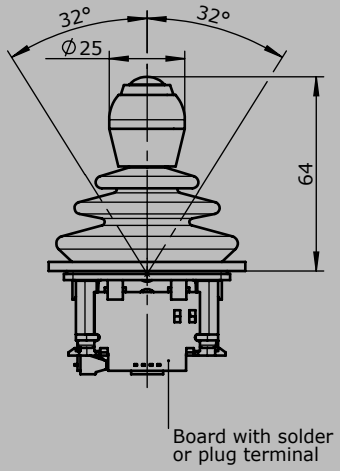

Knob solid GSP

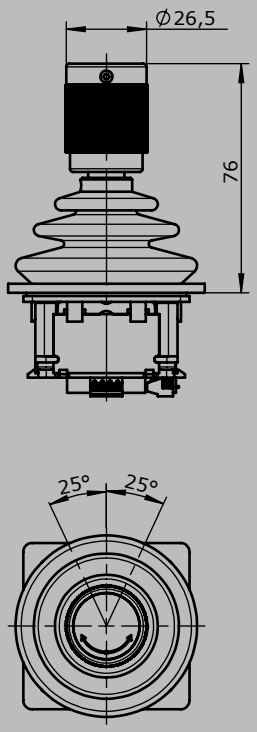

V20 Degree of protection front IP 67

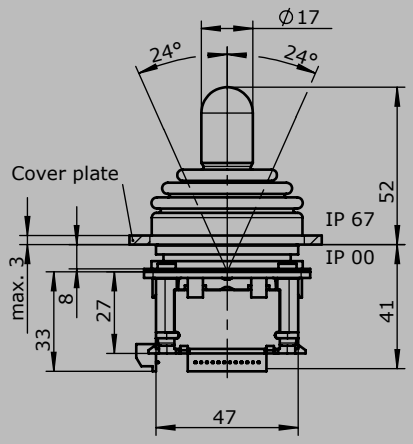

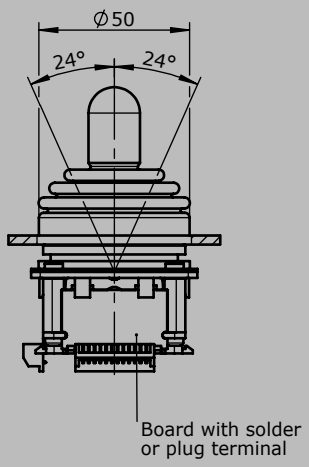

Hole pattern

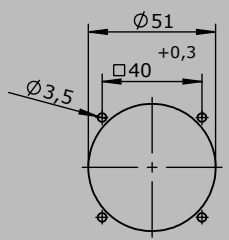

Technical details may vary based on configuration or application! Technical data subject to change without notice!

V2015/1 10.02.2015

Multi-axis controller
V22

GESSMANN Industrial Controllers

The multi-axis controller V22 is a robust switching device for remote control.
The multi-axis controller is resistant to oil, maritime conditions e.g. offshore / vessels, UV radiation typically from the sun.

Example

Technical data

Mechanical life V22	3 million operating cycles
Operation temperature	-40°C til +60°C
Degree of protection	IP 65

	V22A	**- P**	**- E10321**	**- X**

Basic unit	
V22.1A	1-axis with spring return, installation from below
V22A	2-axis with spring return, installation from below
V22.1B	1-axis with spring return, installation from top
V22B	2-axis with spring return, installation from top

Gate	
P	Cross gate
P X	Special gate

Interface				
			Voltage output	
E103	1	☐	0,5...2,5...4,5V redundant by Ub=5V	1 axis
	2	☐		2 axis
			Characteristic: 1 = contra rotating, 2 = concurrently rotating	

Special model	
X	Special / customer-specific

Attachment	
Mating connector JST 8-pole	5300000260
Mating connector JST 8-pole with single wire 500 mm long	5300000261

Technical details may vary based on configuration or application! Technical data subject to change without notice!

GESSMANN Industrial Controllers

1

V22A

Installed from below

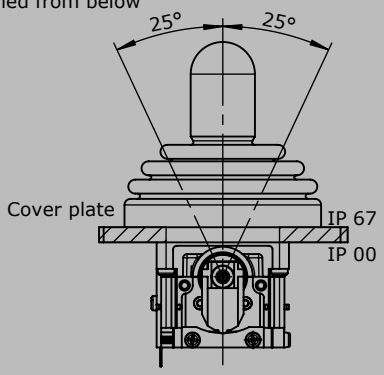

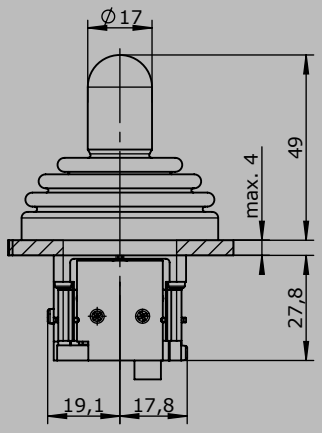

Hole pattern
(installed from below)

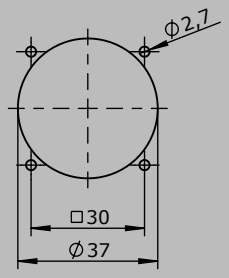

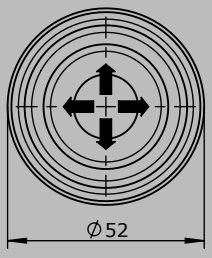

V22B

Installed from the top

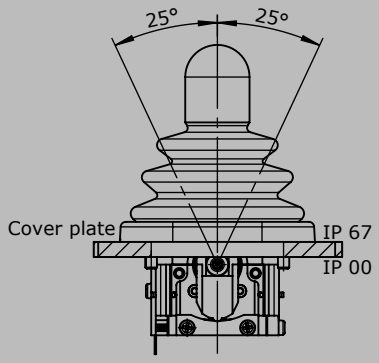

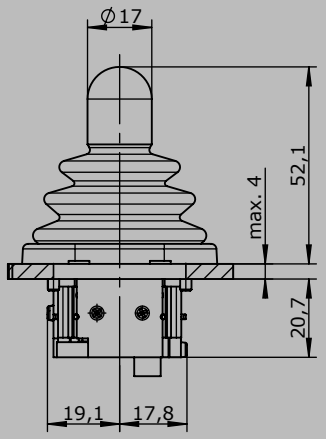

Hole pattern
(installed from the top)

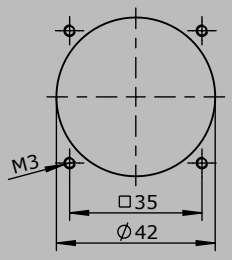

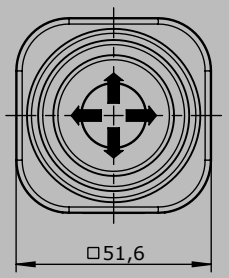

Technical details may vary based on configuration or application! Technical data subject to change without notice!

V2015/1 10.02.2015

Multi-axis controller
V23

GESSMANN Industrial Controllers

The multi-axis controller V23 is a robust switching device for remote control applications. The multi-axis controller is resistant to oil, maritime conditions e.g. offshore / vessels, UV radiation typically from the sun.

Technicalt data

Mechanical life V23	3 million operating cycles
Operation temperature	-40°C til + 60°C
Degree of protection	IP 67 front

Example

		V23A	- P	- C80	+ C80	- X
Basic unit						
V23.1A	1-axis with spring return, installation from below					
V23A	2-axis with spring return, installation from below					
V23.1B	1-axis with spring return, installation from top					
V23B	2-axis with spring return, installation from top					
Gate						
P	Cross gate					
P X	Special gate					
Axis 1: direction 1-2						
C80	Mechanical encoder					
	MEC 3-1					
	EA/26-10	I max. 1 mA				
	Potentiometer resistance	2x5 kOhm				
	Contact arrangement	Arrangement MS 24				
	with 12-pol. JST-connector					
Axis 2: direction 3-4 (not applicable to V23.1)						
See describtion axis 1!						
Special model						
X	Special / customer-specific					

Attachment	
Mating connector JST 12-polig *(included in delivery!)*	5300000263
Mating connector JST 12-pole with single wire 500 mm long	5300000264

Technical details may vary based on configuration or application! Technical data subject to change without notice!

GESSMANN Industrial Controllers

1

V23A

Installed from below

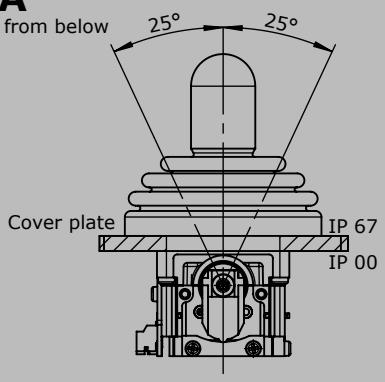

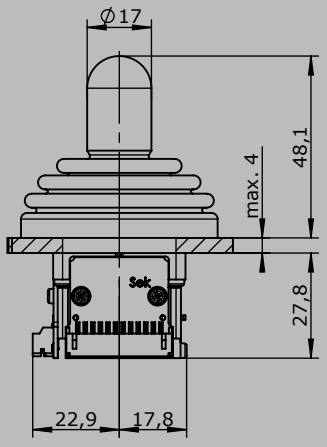

Hole pattern
(installed from below)

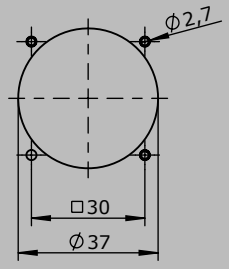

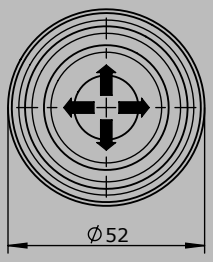

V23B

Installed from the top

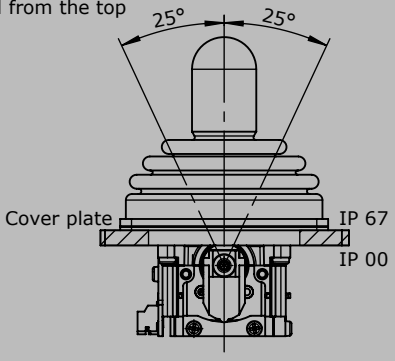

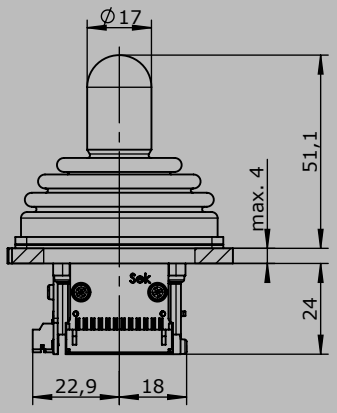

Hole pattern
(installed from the top)

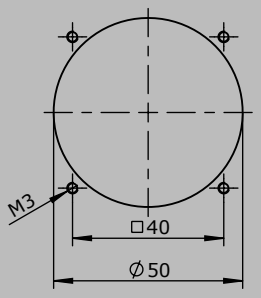

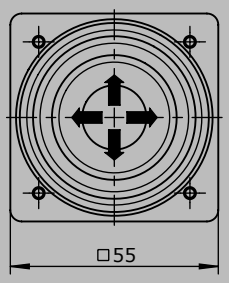

Technical details may vary based on configuration or application! Technical data subject to change without notice!

V2015/1 10.02.2015

Multi-axis controller
V21

GESSMANN Industrial Controllers

The multi-axis controller V21 is a robust hallsensor switching device for electro-hydraulic applications.
The V21 is especially suitable for installation in our ball handles.
The multi-axis controller is resistant to oil, maritime conditions e.g. offshore / vessels, UV radiation typically from the sun.

Technical data

Mechanical life	5 million operating cycles
Operating force	1,6 til 3,5N
Supply voltage	5VDC stabilized
Operation temperature	-40°C til +60°C
Degree of protection	IP 67

	V21	P	- 1	- E1032	- X
Example					

Basic unit

V21.1	1-axis, installation from top with fixing nut
V21	2-axis, installation from top with fixing nut
V21.1A	1-axis, with flange, installation from below
V21A	2-axis, with flange, installation from below
V21.1B	1-axis, with flange, installation from top
V21B	2-axis, with flange, installation from top

Gate

P	Cross gate
P X	Special gate

Knob

	Standard
1	KBAD 980

Interface

			Voltage output	
E103	1	☐	0,5...2,5...4,5V redundant by Ub=5V	1 axis
	2	☐		2 axis
			Characteristic: 1 = concurrently rotating, 2 = contra rotating	

Special model

X	Special / customer-specific

Technical details may vary based on configuration or application! Technical data subject to change without notice!

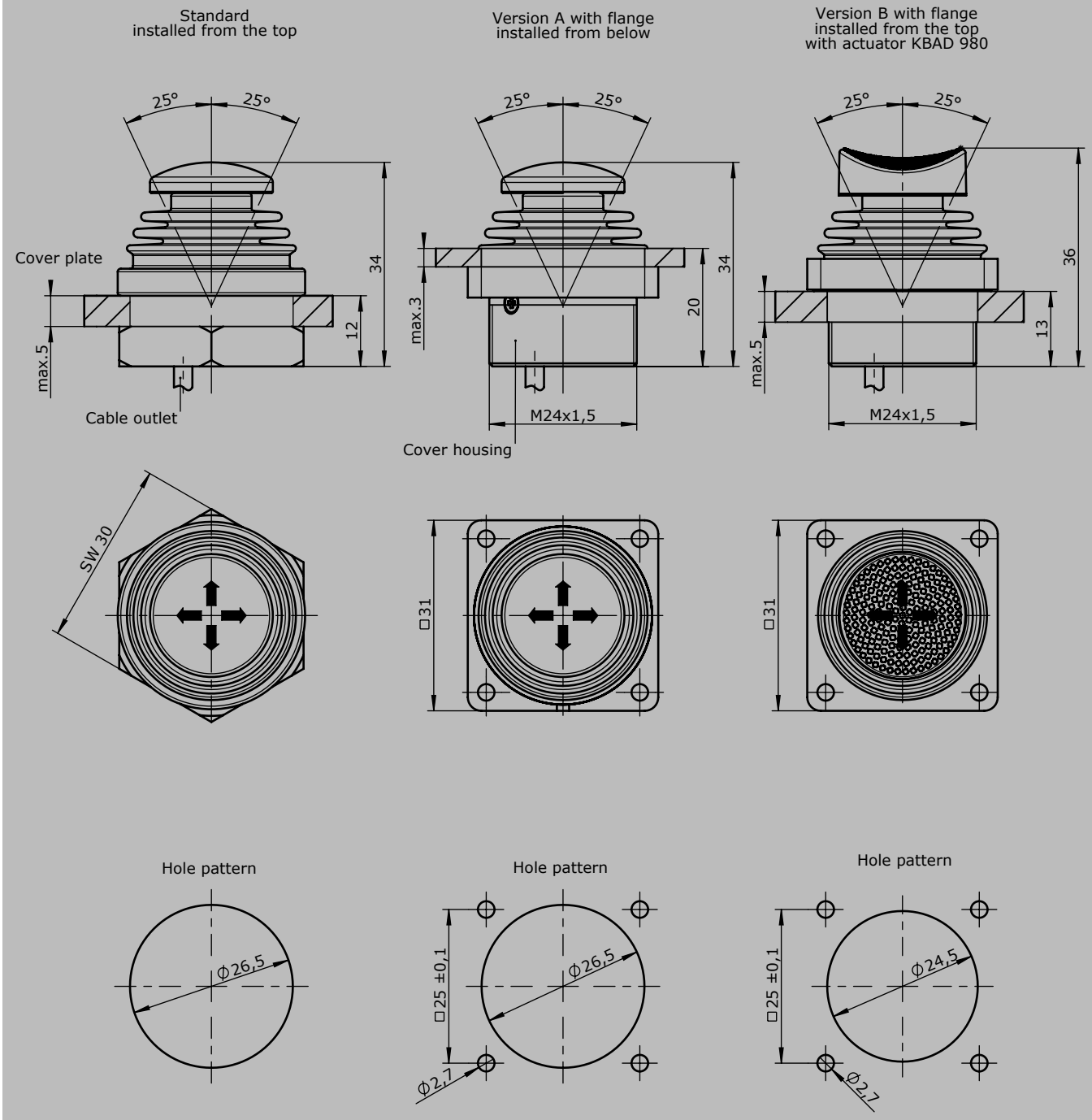

Technical details may vary based on configuration or application! Technical data subject to change without notice!

V2015/1 10.02.2015

Double-handle controller
D64 / DD64

GESSMANN Industrial Controllers

The double-handle controller D64/DD64 is available in either single-axis or multi-axis options and is a robust controller used commonly in electro-hydraulic applications.
The modular design enables the switching device to be used universally.
The double-handle controller is resisdent to oil, maritime conditions e.g. offshore / vessels, UV radiation typically from the sun.

Technical data

Mechanical life D64	10 million operating cycles
Mechanical life DD64	20 million operating cycles
Operation temperature	-40°C til +60°C
Degree of protection	IP 54 front

Example

D64	S5	Q	/	Q	- 01 Z P	+ 03A R C	- A05 P134	+ A110 C01	- X

Basic unit
D64

Control-handle extended
S5 -20 mm

Grip- control handle left
Q T-grip

Grip- control handle right
Q T-grip

Axis 1 (direction 1-2)
01 2 contacts (2A 250V AC15)
Z Spring return
P Potentiometer

Axis 2 (direction 3-4)
03A 6 contacts (4A 250V AC15)
R Friction brake
C Opto-electronical encoder

Description axis 1 (direction 1-2)
A05 Arrangement MSP 21
P134 Potentiometer T396 2x5 kOhm

Description axis 2 (direction 3-4)
A110 Arrangement MSP 24-0
C01 OEC 2-1-1

Special model
X Special / customer-specific

Technical details may vary based on configuration or application! Technical data subject to change without notice!

Double-handle controller
D64 / DD64

GESSMANN Industrial Controllers

Combination possibilities with our ball handles

1

	D64	S5	Q	/	Q	- 01 Z P	+ 03 A R C	- A05	P134	+ A110	C01	- X

Basic unit

D64	
	reinforced version
DD64	

Control-handle long*

	Standard 180 mm
S5	-20 mm
S8	+20 mm
*Only in combination with knob!	

Grip- control handle left

	Knob
M	Mechanical zero interlock
T	Dead man
H	Signal button
D	Push button
DV	Flush push button
Q	T-grip
QM	T-grip with mechanical zero interlock
QMH	T-grip with mechanical zero interlock + signal contact
QH	T-grip + signal button
QD	T-grip + push button side
B10	Palm grip B10... *(see page 143)*

Grip- control handle right

	Knob
M	Mechanical zero interlock
T	Dead man
H	Signal button
D	Push button
DV	Flush push button
Q	T-grip
QM	T-grip with mechanical zero interlock
QMH	T-grip with mechanical zero interlock + signal contact
QH	T-grip with signal button
QD	T-grip push button side
B10...	Palm grip B10... *(see page 143)*

Identification of the installation variants with switching directions:

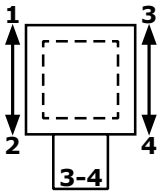

D64 / DD64

Technical details may vary based on configuration or application! Technical data subject to change without notice!

V2015/1 10.02.2015

D64L S5 Q / Q - 01 Z P + 03 A R C - A05 P134 + A110 C01 - X

Axis 1: direction 1-2

(Standard contacts gold-plated 2A 250V AC15)

01	☐	2 contacts	Standard contacts - see arrangement page 106
02	☐	4 contacts	z.B.
03	☐	6 contacts	A980 MS 00
04	☐	8 contacts	A05 MS 21
05	☐	10 contacts	A0500 MS 21-00
06	☐	12 contacts	A110 MS 24-0
	A	= silver contact (4A 250V AC15)	*A99 contact - arrangement according customer request*

Z	Spring return			
R	Friction brake			
(P)	Mounting options for potentiometer and encoder (Gessmann-types)			
P	Potentiometer	P131	T396 2x0,5 kOhm	I max. 1 mA
		P132	T396 2x1 kOhm	I max. 1 mA
		P133	T396 2x2 kOhm	I max. 1 mA
		P134	T396 2x5 kOhm	I max. 1 mA
		P135	T396 2x10 kOhm	I max. 1 mA
		More potentiometer on demand!		
C	Encoder	C... Encoder see page 118		

If both axis identical, it`s enough to describe one axis!
example: A05P134 + A05P134 => A05P134

D64 S5 Q / Q - 01 Z P + 03 A R C - A05 P134 + A110 C01 - X

Axis 2: direction 3-4

(Standard contacts gold plated 2A 250V AC15)

01	☐	2 contacts	Standard contact - see arrangement on page 106
02	☐	4 contacts	z.B.
03	☐	6 contacts	A980 MS 00
04	☐	8 contacts	A05 MS 21
05	☐	10 contacts	A0500 MS 21-00
06	☐	12 contacts	A110 MS 24-0
	A	= silver contacts (4A 250V AC15)	*A99 contact - arrangement according customer request*

Z	Spring return			
R	Friction brake			
(P)	Mounting options for potentiometer and encoder (Gessmann-types)			
P	Potentiometer	P131	T396 2x0,5 kOhm	I max. 1 mA
		P132	T396 2x1 kOhm	I max. 1 mA
		P133	T396 2x2 kOhm	I max. 1 mA
		P134	T396 2x5 kOhm	I max. 1 mA
		P135	T396 2x10 kOhm	I max. 1 mA
		More potentiometer on demand!		
C	Encoder	C... Encoder see page 118		

Technical details may vary based on configuration or application! Technical data subject to change without notice!

D64	S5	Q	/	Q	- 01 Z P	+ 03 A R C	- A05	P134	+ A110	C01	- X

Special model

X Special / customer-specific

Attachment

Indicating labels

Indicating labels engraved

T = Dead man's button
H = Signal button
M = Latch for mechanical zero interlock

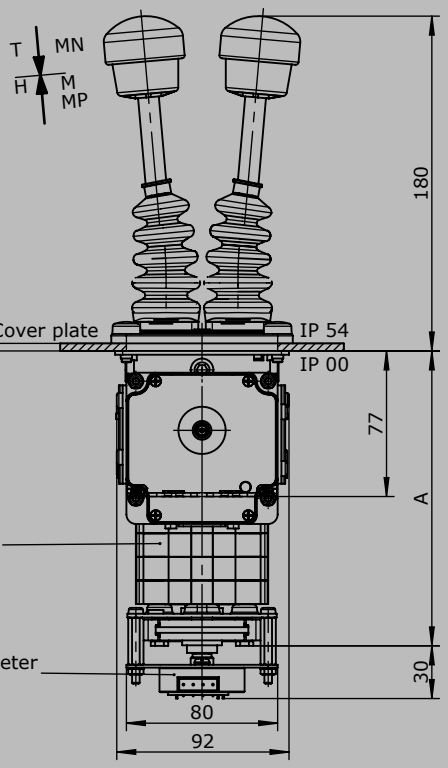

Knob solid
D= Push button

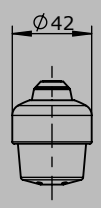

To build in:
Direction 1-2
Direction 3-4

T - grip
D = Push button

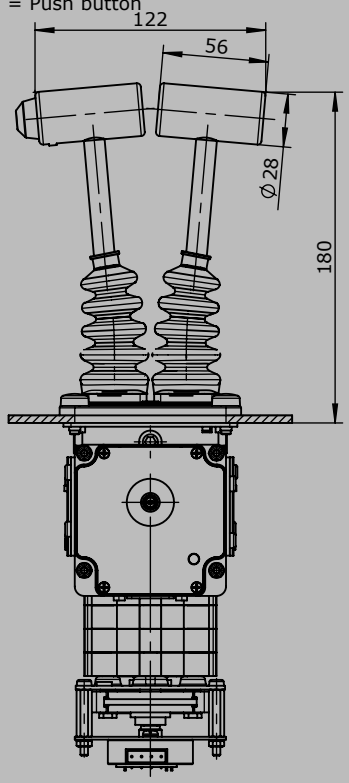

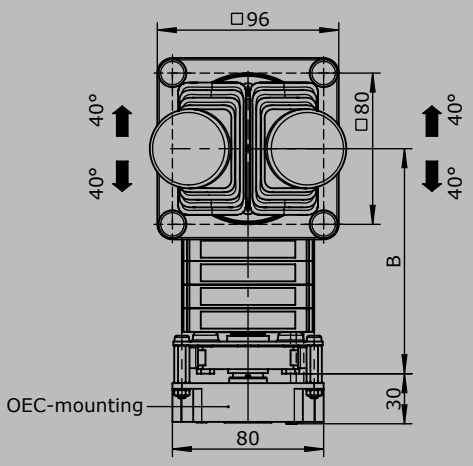

Hole pattern

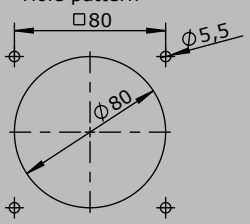

Type	No. of contacts	Dim. A	Dim. B
01	2	119	82
02	4	131	94
03	6	144	107
04	8	156	119
05	10	169	132
06	12	181	144

Technical details may vary based on configuration or application! Technical data subject to change without notice!

Double-handle controller
D8

GESSMANN Industrial Controllers

The double-handle controller D8 is a robust switching device for the hoisting applications.
The modular design enables the switching device to be used universally.
The double-handle controller is resistant to oil, maritime conditions e.g. offshore /vessels, UV radiation typically from the sun.

1

Technical data

Mechanical life D8	10 million operating cycles
Operation temperature	-40°C til +60°C
Degree of protection	IP 54 front

Example

D8	S5	Q	/ Q	- 2ZP	+ 3 RP	- B	- A05 P184	+ A050 P184	- E9012	- X

Basic unit

D8

Control-handle extended

S5 -20 mm

Grip- control-handle left

Q T-grip

Grip- control-handle right

Q T-grip

Axis 1 (direction 1-2)

2 2 contacts (1,5A 24VDC13)
Z Spring return
P Potentiometer

Axis 2 (direction 3-4)

3 3 contacts (1,5A 24VFC13)
R Friction brake
P Potentiometer

Cover housing

B Cover housing

Description axis 1 (direction 1-2)

A05 Arrangement MSP 21
P184 Potentiometer T301 2x5 kOhm

Description axis 2 (direction 3-4)

A050 Arrangement MSP 21-0
P184 Potentiometer T301 2x5 kOhm

Interface

E9012 Potentiometer output for proportional valve PVG32

Special model

X Special / customer-specific

Technical details may vary based on configuration or application! Technical data subject to change without notice!

V2015/1 10.02.2015

Double-handle controller
D8

GESSMANN Industrial Controllers

D8 S5 Q / Q - 2 Z P + 3 R P - B - A05 P184 + A050 P184 - E9012 - X

Basic unit

D8

Control-handle extended*

	Standard 160 mm
S5	-20 mm
S8	+20 mm

**Only in combination with knob!*

Grip- control-handle left

	Knob
M	Mechanical zero interlock
T	Dead man
H	Signal button
D	Push button
Q	T-grip
QD	T-grip with push button side
B10...	Palm grip B10... *(see page 143)*

Grip- control-handle right

	Knob
M	Mechanical zero interlock
T	Dead man
H	Signal button
D	Push button
Q	T-grip
QD	T-grip with push button side
B10...	Ball handle B10... *(see page 143)*

D8

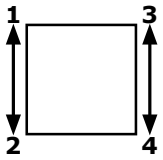

D8 S5 Q / Q - 2 Z P + 3 R P - B A05 P184 + A050 P184 - E9012 - X

Axis 1: direction 1-2 left

1	1 contact	Standard contact - arrangement see page 106	
2	2 contacts	z.B.	
3	3 contacts	A98	
		A05	
		A050	
		A99 contact - arrangement for customer request	

Z	Spring return			
R	Friction brake			
(P)	Mounting options for potentiometer and encoder (Gessmann-types)			
P	Potentiometer	P181	T301 2x0,5 kOhm	I max. 1 mA
		P182	T301 2x1 kOhm	I max. 1 mA
		P183	T301 2x2 kOhm	I max. 1 mA
		P184	T301 2x5 kOhm	I max. 1 mA
		P185	T301 2x10 kOhm	I max. 1 mA
		More potentiometer on demand!		
	Hall-potentiometer	P43	T1360	0,5...2,5...4,5V / 4,5...2,5...0,5V

Technische Angaben können je nach Konfiguration oder Einsatzfall abweichen! Technische Änderungen vorbehalten!

Double-handle controller
D8

GESSMANN Industrial Controllers

Combination possibilities with our ball handles

1

If both axis identical, it`s enough to descrip one axis!
example:...A05P184 + A05P184 => A05P184

D8 S5 Q / Q - 2 Z P + 3 R P - B A05 P184 + A050 P184 - E9012 - X

Axis 2: direction 3-4

1	1 contacts	Standard contact - arrangement see page 106		
2	2 contacts	z.B.		
3	3 contacts	A98		
		A05		
		A050		
		A99 contact - arrangement for customer request		
Z	Spring return			
R	Friction brake			
(P)	Mounting options for potentiometer and encoder (Gessmann-types)			
P	Potentiometer	P181	T301 2x0,5 kOhm	I max. 1 mA
		P182	T301 2x1 kOhm	I max. 1 mA
		P183	T301 2x2 kOhm	I max. 1 mA
		P184	T301 2x5 kOhm	I max. 1 mA
		P185	T301 2x10 kOhm	I max. 1 mA
		More potentiometer on demand!		
	Hall-Potentiometer	P43	T1360	0,5...2,5...4,5V / 4,5...2,5...0,5V

D8 S5 Q / Q - 2 Z P + 3 R P - B A05 P184 + A050 P184 - E9012 - X

Cover housing

B	Cover housing

Interface

E901	1	Potentiometer output for proportional valve PVG32 0,25...0,5...0,75Us	1 axis
	2		2 axis

Special model

X	Special / customer-specific

Technical details may vary based on configuration or application! Technical data subject to change without notice!

V2015/1 10.02.2015

T = Dead man's button
H = Signal button
M = Latch for mechanical zero interlock

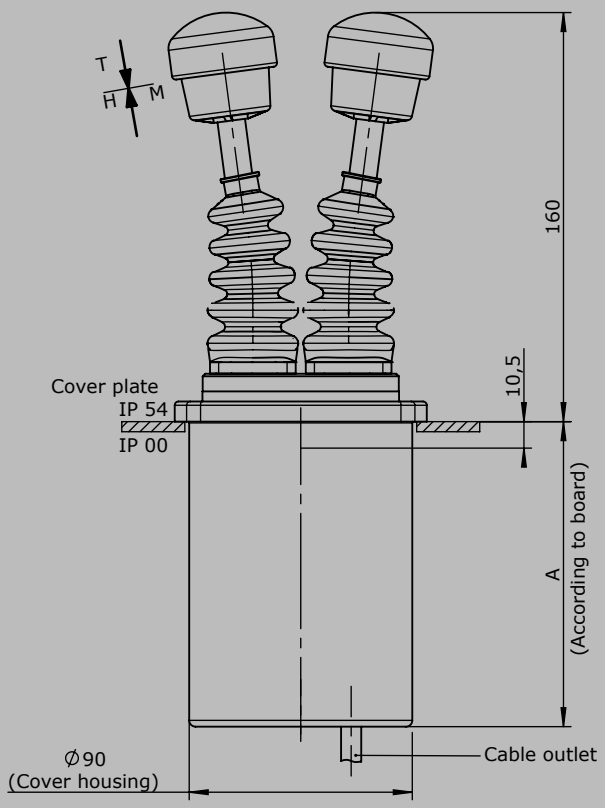

Knob solid
D= Push button

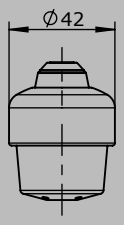

To build in:
Direction 1-2
Direction 3-4

T - grip
D= Push button

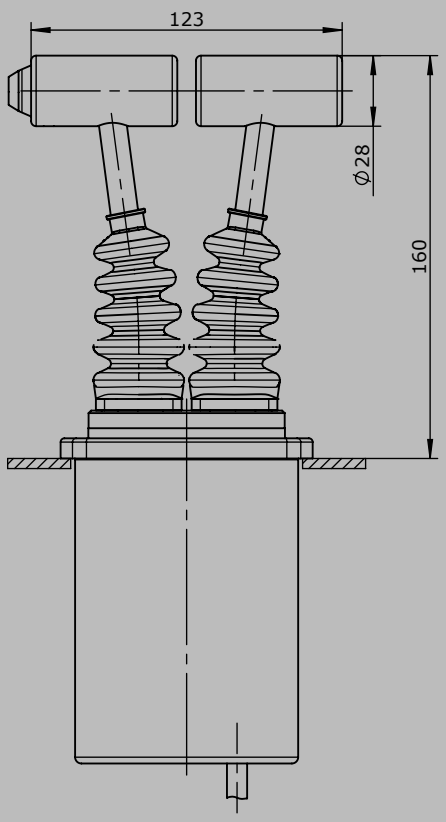

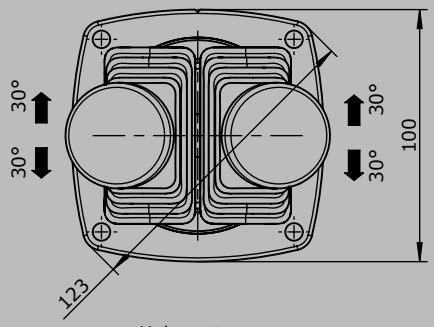

Hole pattern

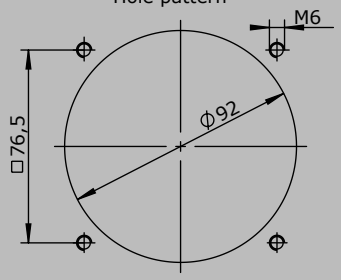

Technical details may vary based on configuration or application! Technical data subject to change without notice!

Double-handle controller
D85

GESSMANN Industrial Controllers

The double-handle controller D85 is a robust switching device for hoisting applications.
The modular design enables the switching device to be used universally.
The double-handle controller is resistant to oil, maritime conditions e.g. offshore /vessels, UV radiation typically from the sun.

1

Technical data

Mechanical life D85	8 million operating cycles
Operation temperature	-40°C til +60°C
Degree of protection	IP 54 front

Example

D85	S5	Q	/	Q	-	Z	+	R	-	B	-	E...	-	X

Basic unit

D85

Control-handle extended

	Standard 160 mm
S5	-20 mm
S8	+20 mm

**Only available in combination with handle!*

Grip- control-handle left

	Knob
M	Mechanical zero interlock
T	Dead man
H	Signal button
D	Push button
Q	T-grip
QD	T-grip with push button side
B10...	Palm grip B10... *(see page 143)*

Grip- control-handle right

see grip-control-handle left

Axis 1: direction 1-2 left

Z	Spring return
R	Friction brake

Axis 2: direction 3-4 left

Z	Spring return
R	Friction brake

Cover housing

B	Cover housing

Interface *(description see following pages)*

E1xx	Voltage output
E2xx	Current output
E3xx	CAN-interface
E4xx	CANOpen Safety interface

Special model

X	Special/ customer-specific

Technical details may vary based on configuration or application! Technical data subject to change without notice!

V2015/1 10.02.2015

Voltage outputs (not stabilized)

Supply voltage	4,75-5,25VDC
Mounting depth A	105 mm
Wiring	Cable 500 mm long with plug (pins) CPC 17 - 14-pole

0,5...2,5...4,5V with 2 direction contacts per axis		
	1 axis	E102 1
	2 axis	2

Voltage output

Supply voltage	9-32VDC (*11,5-32)
Mounting depth A	105 mm
Wiring	Cable 500 mm long with plug (pins) CPC 17 - 14-pole 2. cable (for grip function) 500 mm long with plug (socket) CPC 17 - 14-pole

0,5...2,5...4,5V + 2 direction contacts per axis		
	1 axis	E110 1
	2 axis	2
0...5...10V + 2 direction contacts per axis		
	1 axis	E130 1
	2 axis	2
10...0...10V + 2 direction contacts per axis		
	1 axis	E144 1
	2 axis	2

Voltage output with other value on request!

Current outputs

Supply voltage	9-32VDC
Mounting depth A	105 mm
Wiring	Cable 500 mm long with plug (pins) CPC 17 - 14-pole 2. cable (for grip function) 500 mm long with plug (socket) CPC 17 - 14-pole

0...10...20 mA + 2 direction contacts per axis		
	1 axis	E202 1
	2 axis	2
20...0...20 mA + 2 direction contacts per axis		
	1 axis	E220 1
	2 axis	2
4...12...20 mA + 2 direction contacts per axis		
	1 axis	E210 1
	2 axis	2
20...4...20 mA + 2 direction contacts per axis		
	1 axis	E221 1
	2 axis	2

Voltage output with other value on request!

Technical details may vary based on configuration or application! Technical data subject to change without notice!

1

CAN		
Supply voltage	9-36VDC	
Idle current consumption	120 mA	
Mounting depth A	105 mm (Expansion stage 1)	
	105 mm (Expansion stage 2)	
	120 mm (Expansion stage 3)	
Protocol	CANOpen CiA DS 301 or SAE J 1939	
Baudrate	125 kBit/s til 1 Mbit/s	
Output value	0...128...255	
Wiring	CAN (IN) cable 500 mm with plug M12 (pins)	
	CAN (OUT) cable 500 mm with plug M12 (socket)	
	External in-/outputs cable 500 mm with plug connector CPC 23-37 (socket)	
CAN expansion stage 1		E304 1 ☐
- 3 analog joystick axis		
- 14 digitale joystick functions		
or 10 digital joystick functions + 4 LED-outputs		
CAN expansion stage 2		E305 1 ☐
- 5 analog joystick axis		
- 14 digital joystick functions		
- Input for capacitive sensor		
**external LED-outputs can be used in the grip for LED`s!*		
with additional external in-/output		
- 4 external LED-outputs, 8 external digital inputs		2 ☐
CAN expansion stage 3		E306 1 ☐
- 8 analog joystick axis		
- 14 digital joystick functions		
- Input for capacitive sensor		
**external LED-outputs can be used in the grip for LED`s!*		
with additional external in-/outputs		
- 8 external LED-outputs, 8 external digital inputs		2 ☐
- 8 external LED-outputs, 16 external digital inputs		3 ☐
- 24 external digital inputs		4 ☐
- 8 external LED-outputs, 24 external digital inputs		5 ☐
with additional contact equipment separately wired (not CAN)		
- 2 direction contacts + 1 zero position contact (not potential-free) per axis		1 ☐
- 1 zero position contact (potential-free) per axis		2 ☐

Profibus DP	
Supply voltage	18-30VDC
Baudrate	til 12MBit/s
Output value	0...128...255
Mounting depth A	105 mm
Wiring	Profibus, cable 100 mm with plug D-Sub 9
	Power supply (contact wiring) cable 500 mm with plug connector CPC 13-9 (pins)
	External in-/outputs, cable 500 mm with plug connector CPC 23-37 (socket)

Technical details may vary based on configuration or application! Technical data subject to change without notice!

V2015/1 10.02.2015

Profibus DP		E501 1	☐
- 4 analog joystick axis			
- 16 digital joystick function			
- Input for capacitive sensor			
**external LED-outputs can be used in the grip for LED`s!*			
with additional external in-/outputs			
- 8 external LED-output, 8 external digital input		2	☐
- 16 externe LED-output, 16 external digital input		3	☐
With additional contact equipment separately wired (not profibus)			
- 2 direction contact + 1 zero position contact (not potential-free) per main-axis			1
- 1 zero position contact (potential free) per main-axis			2

Other outputs

Voltage output für PVG32 0,25...0,5...0,75Us, power supply 12 VDC			
Wiring	Cable 500 mm long with plug CPC 17-14 (pins)		
	1 axis	E902 1	☐
	2 axis	2	☐
	3 axis	3	☐
	4 axis	4	☐
With additional direction contacts per main-axis			4
Voltage output für PVG32 0,25...0,5...0,75Us, power supply 12 VDC			
Wiring	Cable 500 mm long with plug CPC 17-14 (pins)		
	1 axis	E906 1	☐
	2 axis	2	☐
	3 axis	3	☐
	4 axis	4	☐
With additional direction contacts per main-axis			4
8 Bit Gray-Code with direction signals per main-axis, supply voltage 9-36 VDC			
Wiring	1 cable 500 mm with plug CPC 23-37 (socket) axis 1-2		
	1 cable 500 mm with plug CPC 23-37 (socket) axis 3-4		
	1 axis	E903 1	☐
	2 axis	2	☐
	3 axis	3	☐
	4 axis	4	☐
8 Bit Binär-Code with direction signals per main-axis, supply voltage 9-36 VDC			
Wiring	1 cable 500 mm with plug CPC 23-37 (socket) axis 1-2		
	1 cable 500 mm with plug CPC 23-37 (socket) axis 3-4		
	1 axis	E904 1	☐
	2 axis	2	☐
	3 axis	3	☐
	4 axis	4	☐

Special model	
Mating connector AMP CPC 17 14-pole (male insert)	5300000209
Mating connector AMP CPC 17 14-pole (male insert) with 2 m cable	5300000210
Mating connector AMP CPC 17 14-pole (socket contact)	5300000211
Mating connector AMP CPC 17 14-pole (socket contact) with 2 m cable	5300000213
Mating connector AMP CPC 23 37-pole (male insert)	5300000214
Mating connector AMP CPC 23 37-pole (male insert) with 2 m cable	5300000215
Mating connector AMP CPC 23 37-pole (socket contact)	5300000216
Mating connector AMP CPC 23 37-pole (socket contact) with 2 m cable	5300000217
Mating connector (CAN) M12 (male insert) with 2 m cable	20201140
Mating connector (CAN) M12 (socket contact) with 2 m cable	20202298
Mating connector (Profibus) straight	22201440
Mating connector (Profibus) 90° angled	22201741

Technical details may vary based on configuration or application! Technical data subject to change without notice!

V2015/1 10.02.2015

T = Dead man's button
H = Signal button

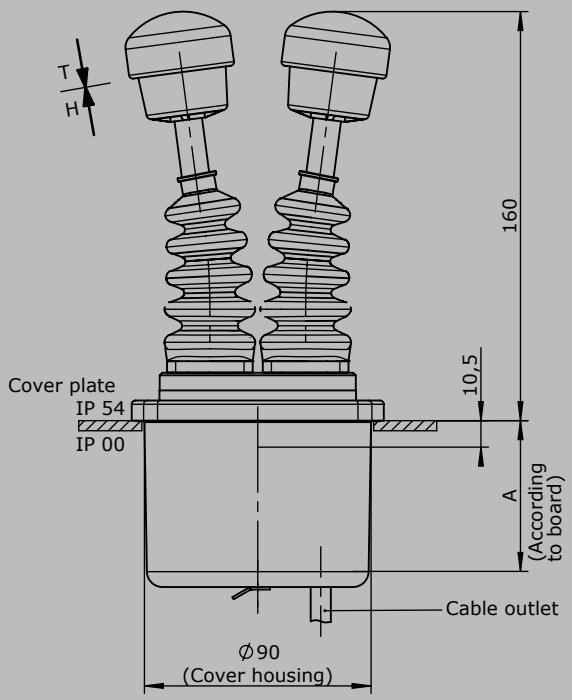

Knob solid
D= Push button

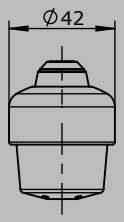

To build in:
Direction 1-2
Direction 3-4

T - grip
D= Push button

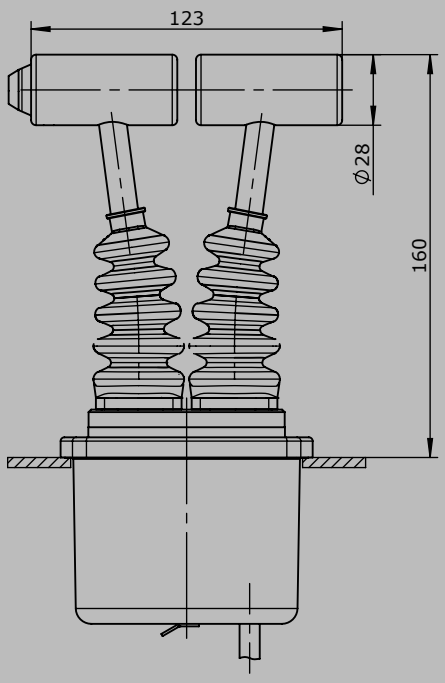

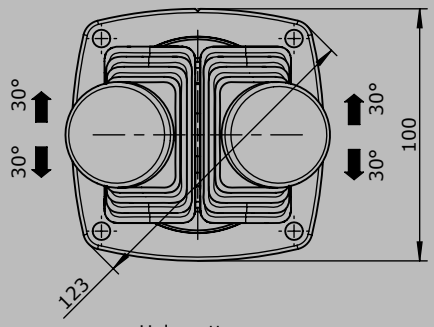

Hole pattern

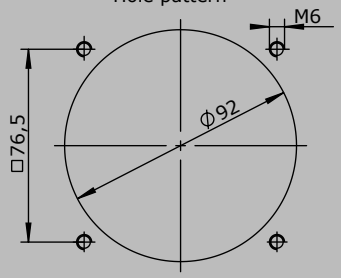

Technical details may vary based on configuration or application! Technical data subject to change without notice!

Double-handle controller
D3

GESSMANN Industrial Controllers

The double-handle controller D3 is a robust switching device for nautical navigation applications.
The modular design enables the switching device to be used universally.
The double-handle controller is resistant to oil, maritime conditions e.g. offshore /vessels, UV radiation typically from the sun.

1

Technical data

Mechanical life D3	12 million operating cycles
Operation temperature	-40°C til +60°C
Degree of protection	IP 66 front

Example

D3 S5 Q / Q - 2 R P + 3 R P - B - A05 P214 - A050 P214 - E1292 - X

Basic unit
D3

Control-handle extended
S5 -20 mm

Grip- control handle left
Q T-grip

Grip- control handle right
Q T-grip

Axis 1 (direction 1-2)
2 2 contacts (1,5A 24VDC13)
R Friction brake
P Potentiometer

Axis 2 (direction 3-4)
3 3 contacts (1,5A 24VDC13)
R Friction brake
P Potentiometer

Cover housing
B Cover housing

Description axis 1 (direction 1-2)
A05 Arrangement MSP 21
P214 Potentiometer T246 2x5kOhm

Description axis 2 (direction 3-4)
A050 Arrangement MSP 21-0
P214 Potentiometer T246 2x5kOhm

Interface
E1292 Voltage output 0...5...10V

Special model
X Special / customer-specific

Technical details may vary based on configuration or application! Technical data subject to change without notice!

V2015/1 10.02.2015

Double-handle controller
D3

GESSMANN Industrial Controllers

Combination possibilities with our ball handles

D3 S5 Q / Q - 2 R P + 3 R P - B - A05 P214 + A050 P214 - E1292 - X

Basic unit

D3

Control-handle extended*

	Standard 148 mm
S5	-20 mm
S8	+20 mm

**Only available in combination with handle!*

Grip - control-handle left

	Knob
D	Push button
Q	T-grip
QD	T-grip with push button side

Grip - control-handle right

	Knob
D	Push button
Q	T-grip
QD	T-grip with push button side

Identification of the installation variants with switching directions:

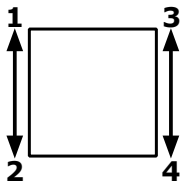

D3

D3 S5 Q / Q - 2 R P + 3 R P - B - A05 P214 + A050 P214 - E1292 - X

Axis 1: direction 1-2 left

1	1 contact	Standard contact- arrangement see page 106		
2	2 contacts	z.B.		
3	3 contacts	A98	MS 0	
		A05	MS 21	
		A050	MS 21-0	
		A99 contact - arrangement according customer request		
R	Friciton brake			
(P)	Mounting options for potentiometer and (Gessmann-types)			
P	Potentiometer	P211	T246 2x0,5 kOhm	I max. 1 mA
		P212	T246 2x1 kOhm	I max. 1 mA
		P214	T246 2x5 kOhm	I max. 1 mA
		P215	T246 2x10 kOhm	I max. 1 mA
		More potentiometer on demand!		
	Hall-Potentiometer	P42	T1003	0,5...2,5...4,5V / 4,5...2,5...0,5V

Technical details may vary based on configuration or application! Technical data subject to change without notice!

Double-handle controller
D3

GESSMANN Industrial Controllers

If both axis identical, it`s enough to describ one axis!
example: ...A05P214 + A05P214 => A05P214

D3 S5 Q / Q - 2 R P + 3 R P - B - A05 P214 + A050 P214 - E1292 - X

1

Axis 2: direction 3-4 left

1	1 contact	Standard contact- arrangement see page 106		
2	2 contacts	z.B.		
3	3 contacts	A98	MS 0	
		A05	MS 21	
		A050	MS 21-0	
		A99 contact - arrangement according customer request		
R	Friction brake			
(P)	Mounting options for potentiometer (Gessmann-types)			
P	Potentiometer	P211	T246 2x0,5 kOhm	I max. 1 mA
		P212	T246 2x1 kOhm	I max. 1 mA
		P214	T246 2x5 kOhm	I max. 1 mA
		P215	T246 2x10 kOhm	I max. 1mA
		More potentiometer on demand!		
	Hall-Potentiometer	P43	T1003	0,5...2,5...4,5V/4,5...2,5...0,5V

D3 S5 Q / Q - 2 R P + 3 R P - B - A05 P214 + A050 P214 - E1292 - X

Cover housing

B	Cover housing

Interface *(description the following pages)*

	Potentiometer output
E1xx	Voltage output
E2xx	Current output

Special model

X	Special / customer-specific

Voltage outputs

Supply voltage	11,5-32VDC		
Wiring	Cable 500 mm long with plug (pins) CPC 17 - 14-pole		
0...5...10V per axis			
		1 axis	E129 1 ☐
		2 axis	2 ☐
10...0...10V per axis			
		1 axis	E141 1 ☐
		2 axis	2 ☐
-10...0...+10V per axis			
		1 axis	E140 1 ☐
		2 axis	2 ☐
Voltage output with other value on request!			

Technical details may vary based on configuration or application! Technical data subject to change without notice!

V2015/1 10.02.2015

Current outputs			
Supply voltage	18-36VDC		
Wiring	Cable 500 mm long with plug (pins) CPC 17 - 14-pole		
4...12...20 mA per axis			
		1 axis	E209 1
20...4...20 mA per axis			
		1 axis	E217 1

Attachment		
Mating connector AMP CPC 17 14-pole (socket contact)	5300000211	
Mating connector AMP CPC 17 14-pole (socket contact) with 2 m cable	5300000213	

Technical details may vary based on configuration or application! Technical data subject to change without notice!

1

T- grip
D=Push button

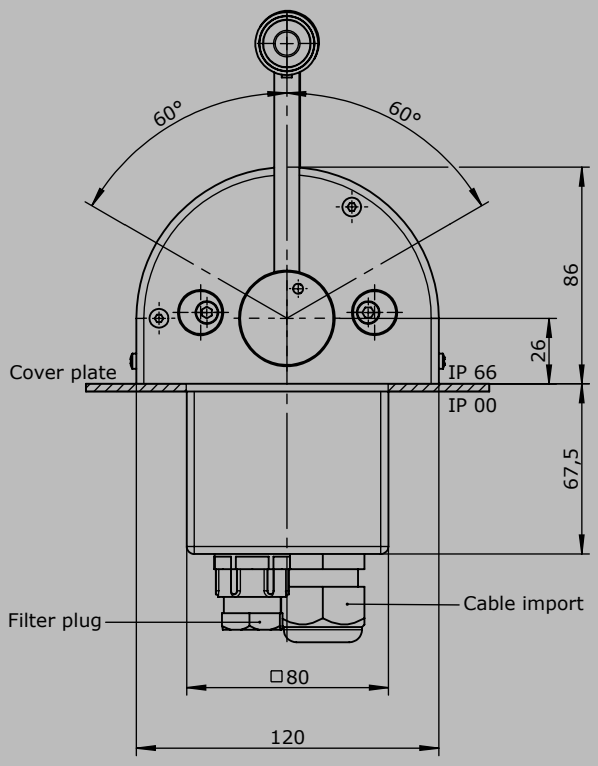

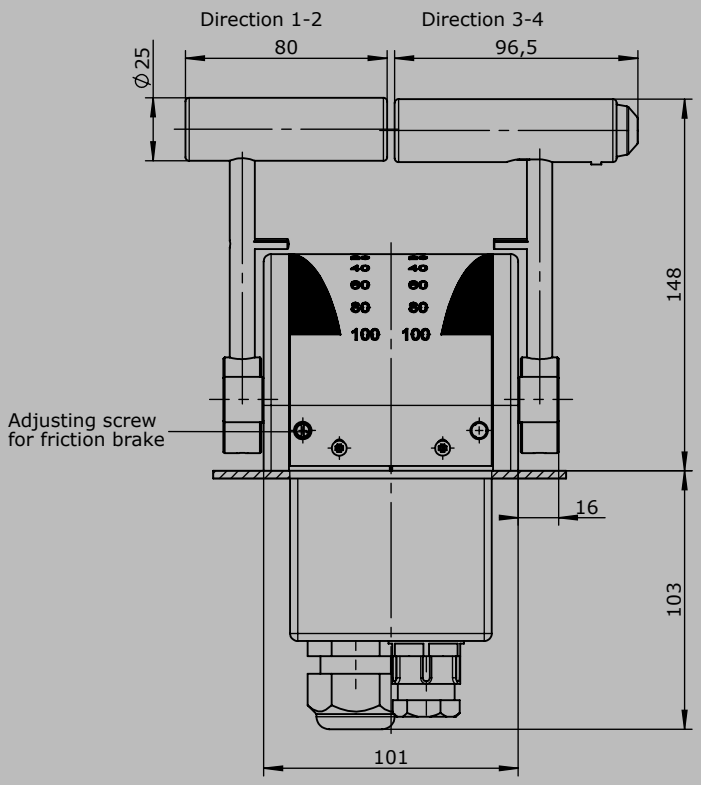

Hole pattern

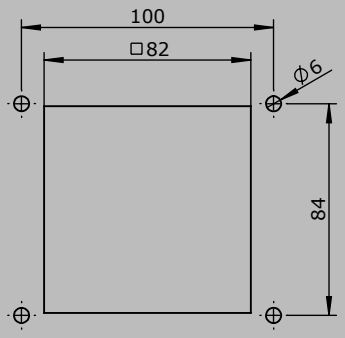

Knob solid
D= Push button

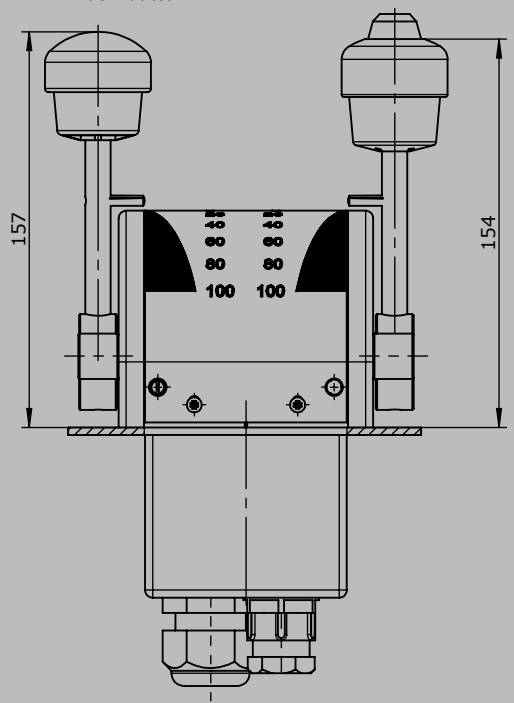

Technical details may vary based on configuration or application! Technical data subject to change without notice!

V2015/1 10.02.2015

Single-axis controller
S1

GESSMANN
Industrial Controllers

The single-axis controller S1 is a robust switching device for remote control and electro-hydraulic applications.
The modular design of the switching device is universally applicable.
The single-axis controller is resistant to oil, maritime conditions e.g. offshore /vessels, UV radiation typically from the sun.

Technical data

Mechanical life S1	6 million operating cycles
Operating temperature	-40°C til +60°C
Degree of protection	IP 65

1

Example

S1	T	- 2 Z P	- A05 P374	- X

Basic unit

S1	1-axis

Grip / palm grip

T	Dead man

Axis 1 (direction 1-2)

2	2 contacts (1,5A 24V DC13)
Z	Spring return
P	Potentiometer

Description axis 1 (direction 1-2)

A05	Arrangement MSP 21
P374	Potentiometer T 375 2x5 kOhm

Special model

X	Special / customer-specific

Technical details may vary based on configuration or application! Technical data subject to change without notice!

Single-axis controller
S1

GESSMANN Industrial Controllers

1

S1 T - 2 Z P - A05 P374 - X

Basic unit

S1	1-axis

Grip / palm grip

	Knob (standard)
M	Mechanical zero interlock
T	Dead man
D	Push button
GS8	Knob GS8

S1 T - 2 Z P - A05 P374 - X

Axis 1: direction 1-2 left

1	1 contact	Standard contact - arrangement see page 106			
2	2 contacts	z.B.			
3	3 contacts	A05	MS 21		
4	4 contacts	A050	MS 21-0		
		A060	MS 22-0		
		A99 contact - arrangement according customer request			
Z	Spring return *(included in basic unit!)*				
R	Friction brake				
P	Potentiometer	P372	T375	2x1 kOhm	I max. 1 mA
		P374	T375	2x5 kOhm	I max. 1 mA
		P274	T430	2x5 kOhm	I max. 1 mA
		with direction track			

S1 T - 2 Z P - A05 P374 - X

Special model

X	Special / customer-specific

Technical details may vary based on configuration or application! Technical data subject to change without notice!

T = Dead man's button

Knob solid GK4

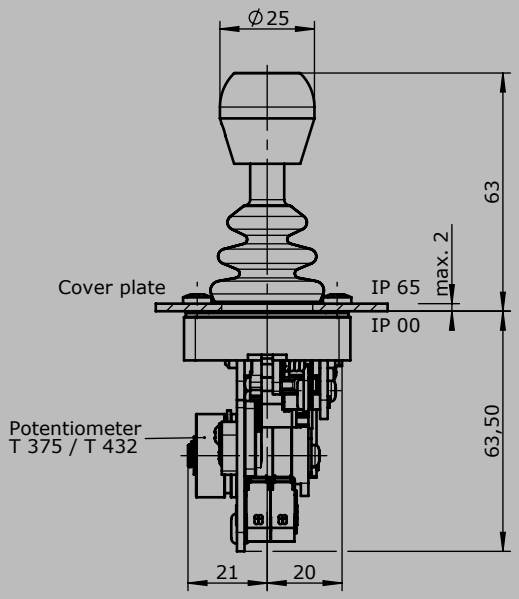

Knob GS8

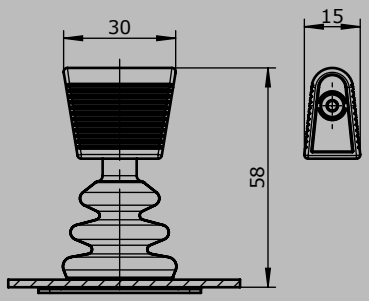

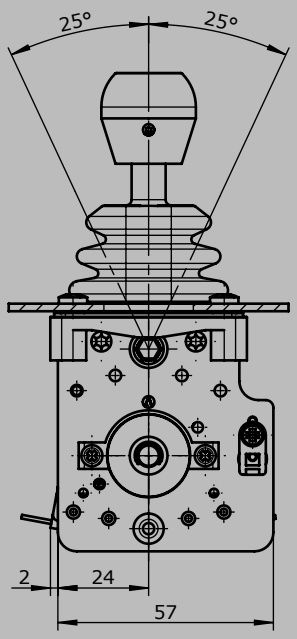

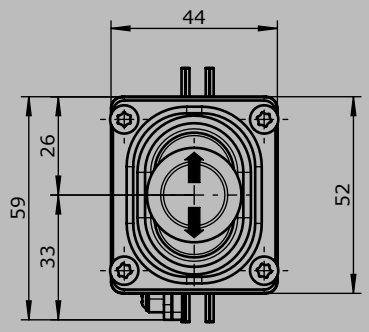

Hole pattern

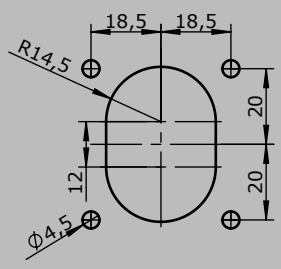

Technical details may vary based on configuration or application! Technical data subject to change without notice!

Single-axis controller
S11

GESSMANN Industrial Controllers

The single-axis controller S11 is a hall sensor switching device designed for electro-hydraulic and remote controlled hydraulic.
The modular design of the switching device is universally applicable.
The single-axis controller is resistant to oil, maritime conditions e.g. offshore /vessels, UV radiation typically from the sun.

1

Technical data

Mechanical life S11	6 million operating cycles
Operating temperature	-40°C til +60°C
Degree of protection	IP 65

Example

S11	T	- Z	- E...	- X

Basic unit

S11 1-axis

Grip / palm grip

Knob (standard)
M Mechanical zero interlock
T Dead man
D Push button
GS8 Knob GS8

Z Spring return *(included in basic unit!)*
R Friction brake

Interface *(description on the following page)*

E0xx Digital output
E1xx Voltage output
E2xx Current output

Special model

X Special / customer-specific

Identification of the installation variants with switching directions:

S11

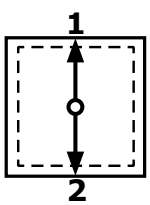

Technical details may vary based on configuration or application! Technical data subject to change without notice!

V2015/1 10.02.2015

Digital Output			
Supply voltage	9-32VDC		
Current carrying capacity	Direction signal 150 mA		
	Zero position signal 500 mA		
Wiring	Cable 500 mm long with plug (pins) Mini-Mate-N-Lok 10-pole		
Cable 500 mm long with plug (pins)			
		1 axis	E001 1

Voltage output (not stabilized)			
Supply voltage	4,75-5,25VDC		
Current carrying capacity	Direction signal 8 mA		
Wiring	Cable 500 mm long with plug (pins) Mini-Mate-N-Lok 10-pole		
		Characteristic: 1= contra rotating, 2= concurrently rotating	
0,5...2,5...4,5V redundant + 2 direction signal per axis			
		1 axis	E104 1 ☐

Voltage output			
Supply voltage	9-32VDC (*11,5-32V)		
Current carrying capacity	Direction signal 150 mA		
	Zero position signal 500 mA		
Wiring	Cable 500 mm long with plug (pins) Mini-Mate-N-Lok 10-pole		
		Characteristic: 1= contra rotating, 2= concurrently rotating	
0,5...2,5...4,5V redundant + 2 direction signal + 1 zero position signal (galvanically isolated) per axis			
		1 axis	E112 1 ☐
0...5...10V redundant + 2 direction signal + 1 zero position signal (galvanically isolated) per axis, supply voltage 11,5 - 32VDC			
		1 axis	E132 1 ☐
10...0...10V redundant + 2 direction signal + 1 zero position signal (galvanically isolated) per axis, supply voltage 11,5 - 32VDC, sensor redundant, 1 output with signal monitoring			
		1 axis	E136 1

Voltage output with other value on request!

1

Current output			
Supply voltage	9-32VDC		
Current carrying capacity	Direction signal 150 mA		
	Zero position signal 500 mA		
	75 mm (from 3 axis)		
Wiring	Cable 500 mm long with plug (pins) CPC 13 - 9-pole		
0...10...20mA redundant + 2 direction signal + 1 zero position signal (galvanically isolated) per axis, sensor redundant, 1 output with signal monitoring with signal monitoring		1 axis	E206 1
20...0...20mA redundant + 2 direction signal + 1 zero position signal (galvanically isolated) per axis, sensor redundant, 1 output with signal monitoring		1 axis	E208 1
4...12...20mA redundant + 2 direction signal + 1 zero position signal (galvanically isolated) per axis, sensor redundant, 1 output with signal monitoring		1 axis	E214 1
20...4...20mA redundant + 2 direction signal + 1 zero position signal (galvanically isolated) per axis, sensor redundant, 1 output with signal monitoring		1 axis	E216 1
Voltage output with other value on request!			

Attachment	
Mating connector AMP Mini-Mate-N-LoK 10-pole (socket contact)	5300000963
Mating connector AMP Mini-Mate-N-LoK 10-pole (socket contact) with 2 m cable	5300000964

T = Dead man's button

Knob solid GK4

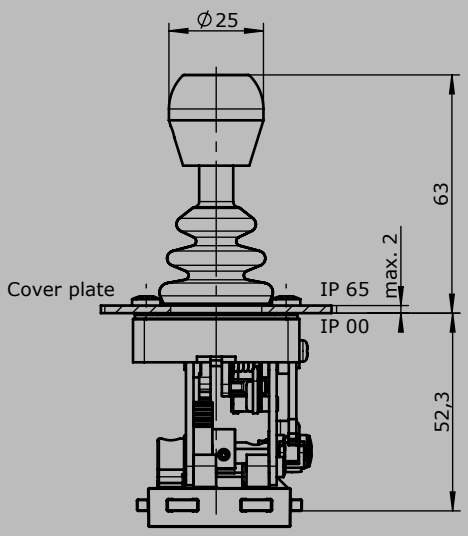

Knob GS8

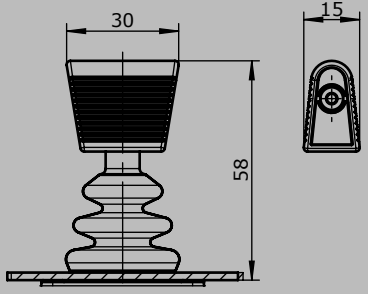

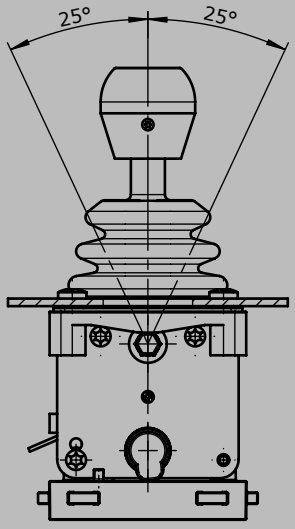

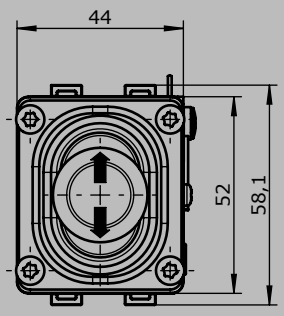

Hole pattern

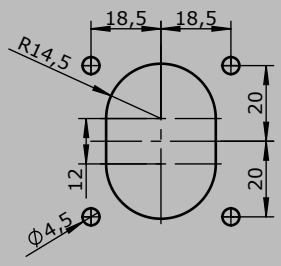

Technical details may vary based on configuration or application! Technical data subject to change without notice!

Single-axis controller
S14

GESSMANN Industrial Controllers

The single-axis controller S14 is a designed hall sensor switching device for electro-hydraulic and remote controlled hydraulic.
The modular design of the switching device is universally applicable.
The single-axis controller is resistant to oil, maritime conditions e.g. offshore /vessels, UV radiation typically from the sun.

1

Techical data

Mechanical life S14	6 million operating cycles
Operating temperature	-40°C til +60°C
Degree of protection	IP 65

Example

	S14L	S8	T	- 01ZC	+ A05 C61	- X
Basic unit						
S14L						
Control-handle extended						
S8 +20 mm						
Grip / palm grip						
T Dead man						
Axis 1 (direction 1-2)						
01 2 contacts (2A 250V AC15)						
Z Spring return						
C Mechanical encoder						
Description axis 1 (direction 1-2)						
A05 Arrangement MSP 21						
C61 Mechanical encoder MEC 1-2						
Special model						
X Special / customer-specific						

	S14L	S8	T	- 01ZC	+ A05 C61	- X
Basic unit						
S14L 1-axis left						
S14R 1-axis right						
Control-handle extended						
Standard						
S8 +20 mm						
Grip / palm grip						
Knob (standard)						
M Mechanical zero interlock						
MH Mechanical zero interlock + signal contact						
T Dead man						
H Signal button						
GK1 Knob 42 mm						
GK1M Mechanical zero interlock						
GK1MN Mechanical zero interlock (push down)						
GK1T Dead man						
GK1H Signal button						
GK1MH Mechanical zero interlock + signal contact						

Identification of the installation variants with switching directions:

S14

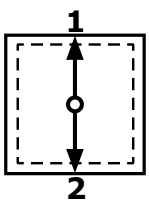

Technical details may vary based on configuration or application! Technical data subject to change without notice!

V2015/1 10.02.2015

		S14L	S8	T	- 01ZC	+ A05	C61	- X
GK1D	Push button							
GK1DV	Flush push button							
GSP	Twist Handle 2x5 kOhm + direction track Imax= 1 mA							
B ...	Palm grip B... *(see page palm grip 128)*							

Attention! The single-axis controller S14 is not suited for big palm grip (B3, B7/B8, B9...)!

		S14L	S8	T	- 01ZC	+ A05	C61	- X
Axis 1: direction 1-2 left / direction 5-6 right								
	(Standard contacts gold-plated 2A 250V AC15)							
01	2 contacts	Standard contact - arrangement see page 106						
02	4 contacts	z.B.						
03	6 contacts	A05	MS 21					
		A0500	MS 21-00					
		A110	MS 24-0					
		A99 contact - arrangement according customer request						
Z	Spring return *(included in basic unit!)*							
R	Friction brake							
C	Mechanical encoder	C61	MEC 1-2					
			EA/02-10			I max. 1 mA		
			Potentiometer track			2x10 kOhm		
			Direction track			Arrangement MS 26-0		
		C62	MEC 1-7					
			EA/10-10			I max. 1 mA		
			Potentiometer track			2x5 kOhm		
			Direction track			Arrangement MS 26-0-1		
		C66	MEC 1-10					
			EA/17-10			I max. 1 mA		
			Potentiometer track			2x1,5 kOhm		
			Direction track			Arrangement MS 21-0+MS 21		
		C63	MEC 1-6					
			EA/09-10					
			6 Bit Gray Code					
		C64	MEC 1-6-5					
			ER/36-10			Us= 18-30V		
			Current output 20...4...20mA					
		C65	MEC 1-6-8					
			ER/ 36-10			Us= 18-30V		
			Current output 20...0...20mA					
		C67	MEC 1-6-9					
			ER/36-11			Us= 18-30V		
			Voltage output 10...0...10V					
		More potentiometer on request!						

		S14L	S8	T	- 01ZC	+ A05	C61	- X
Special model								
X	Special / customer-specific							

Technical details may vary based on configuration or application! Technical data subject to change without notice!

GESSMANN Industrial Controllers

1

T = Dead man's button
H = Signal button
M = Latch for mechanical zero interlock

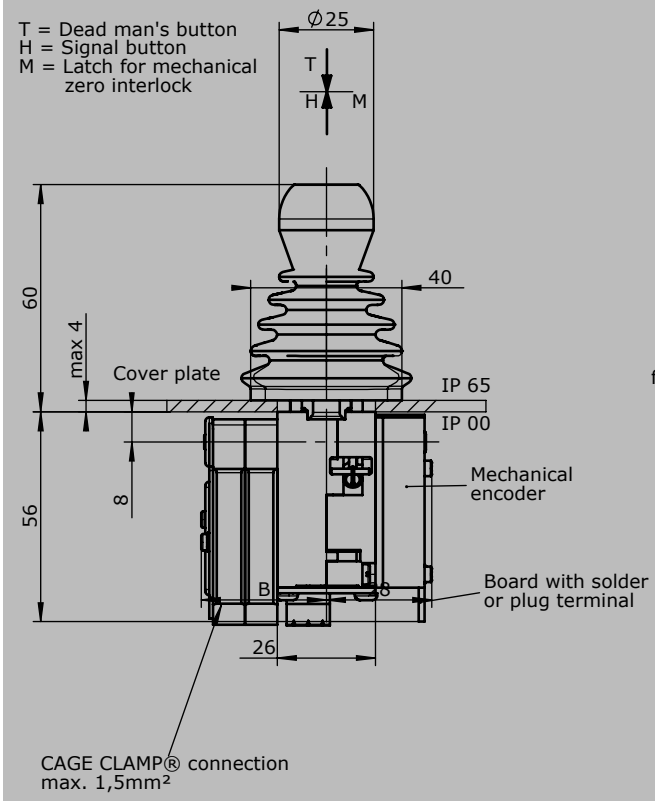

Knob solid GK
for MN, MP

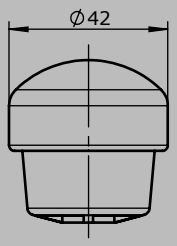

Knob solid GSP
for 3.direction 11-12

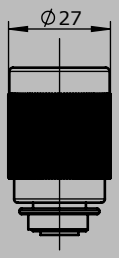

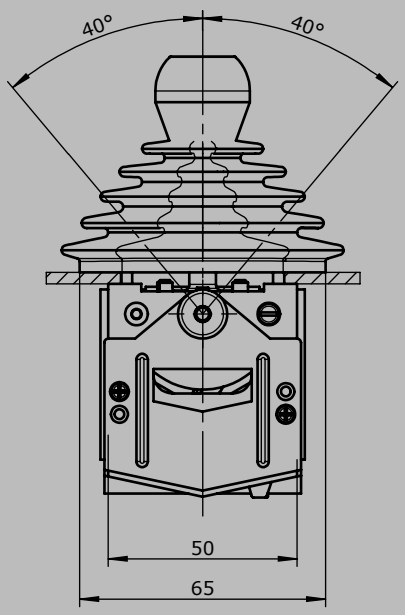

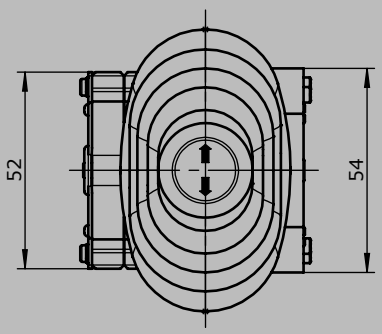

Hole pattern

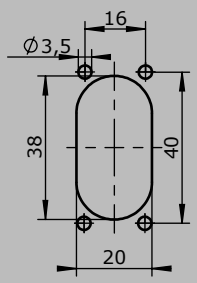

Type	No. of contacts	Dim. B
01	2	24
02	4	33
03	6	42

Technical details may vary based on configuration or application! Technical data subject to change without notice!

V2015/1 10.02.2015

Single-axis controller
S2 / SS2 / S21

GESSMANN
Industrial Controllers

The single-axis controller S2/SS2 is a robust switching device for remote controlled and electrohydraulic applications.
The modular design of the switching device is universally applicable.
The single-axis controller is resistant to oil, maritime conditions e.g. offshore /vessels, UV radiation typically from the sun.

Technical data

Mechanical life S2 / S21	6 million operating cycles
Mechanical life SS2	10 million operating cycles
Operating temperature	-40°C til +60°C
Degree of protection	IP 54

1

Example

S2L	S5	T	- 02 Z P	- A050 P134	- X

Basic unit
S2L left

Control-handle extended
S5 -20 mm
**Only possible in combination with handle!*

Grip / palm grip
T Dead man

Axis 1 (direction 1-2)
02 3 contacts (2A 250V AC15)
Z Spring return
P Potentiometer

Description axis 1 (direction 1-2)
A050 Arrangement MSP 21
P134 Potentiometer T396 2x5 kOhm

Special model
X Special / customer-specific

S2L	S5	T	- 02 Z P	- A050 P134	- X

Basic unit

S2L	Single-axis controller left
S2R	Single-axis controller right
S21L	Single-axis controller left with flange 96x96 mm
S21R	Single-axis controller right with flange 96x96 mm
	reinforced version
SS2L	Single-axis controller left
SS2R	Single-axis controller right
SS21L	Single-axis controller left with flange 96x96 mm
SS21R	Single-axis controller right with flange 96x96 mm

Identification of the installation variants with switching directions:

left

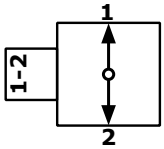

right

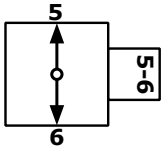

Technical details may vary based on configuration or application! Technical data subject to change without notice!

Single-axis controller
S2 / SS2 / S21

GESSMANN Industrial Controllers

Combination possibilities with our ball handles

1

	S2L	S5	T	- 02 Z P	- A050 P134	- X

Control-handle extended

	Standard
S5	-20 mm
S8	+20 mm

Grip / palm grip

	Knob (standard)
M	Mechanical zero interlock
MN	Mechanical zero interlock (push down)
T	Dead man
MT	Mechanical zero interlock + dead man
H	Signal button
MH	Mechanical zero interlock + signal button
D	Push button
MD	Mechanical zero interlock + push button
DV	Flush push button
MDV	Mechanical zero interlock + flush push button
B...	Palm grip B... *(see page palm grip 128)*

	S2L	S5	T	- 02 Z P	- A050 P134	- X

Axis 1: direction 1-2 left / direction 5-6 right

02	3 contacts	Standard contact - arrangement see page 106		
03	5 contacts	z.B.		
04	7 contacts	A98	MS 0	
05	9 contacts	A05	MS 21	
		A0500	MS 21-00	
		A110	MS 24-0	
		A99 contact - arrangement according customer request		
Z	Spring return			
R	Friction brake			
(P)	Possibility of mounting potentiometer and encoder (Gessmann-types)			
P	Potentiometer	P131	T396 2x0,5 kOhm	I max. 1 mA
		P132	T396 2x1 kOhm	I max. 1 mA
		P133	T396 2x2 kOhm	I max. 1 mA
		P134	T396 2x5 kOhm	I max. 1 mA
		P135	T396 2x10 kOhm	I max. 1 mA
		More potentiometer on request!		
C	Encoder	C... Encoder see page 118		

Technical details may vary based on configuration or application! Technical data subject to change without notice!

V2015/1 10.02.2015

S2L	S5	T	- 02 Z P	- A050 P134	- X

Special model	
X	Special / customer-specific
X1	Microswitch (MZT 1) positively driven NC contact

Attachment
Indicating labels
Indicating labels with engraving

Technical details may vary based on configuration or application! Technical data subject to change without notice!

GESSMANN Industrial Controllers

1

T = Dead man's button
H = Signal button
M = Latch for mechanical zero interlock

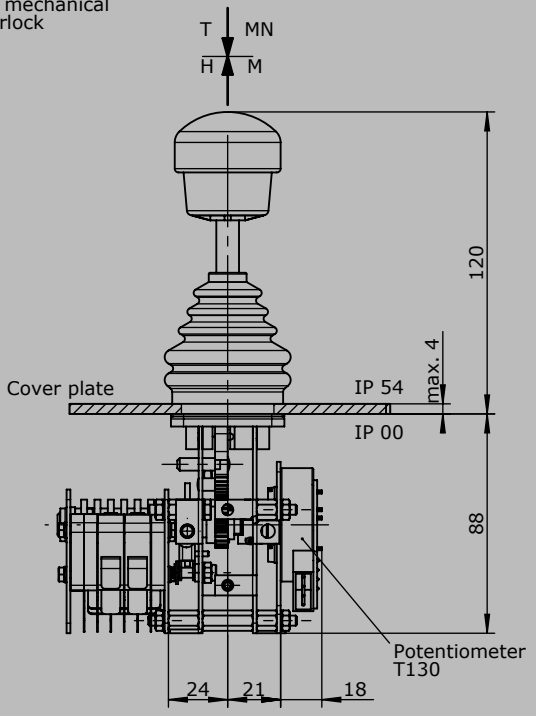

Knob solid
D= Push button

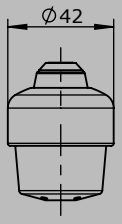

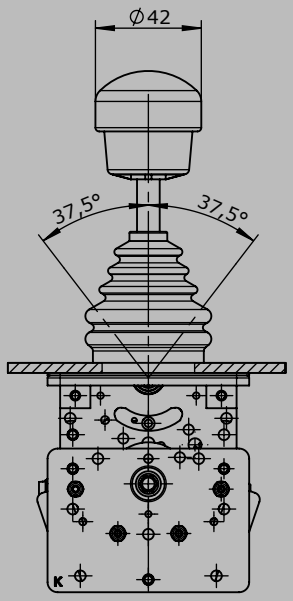

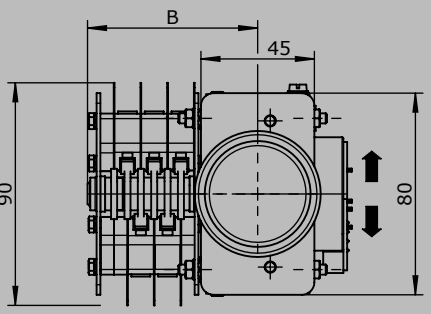

Palm grip B5
B5 T = Dead man's button

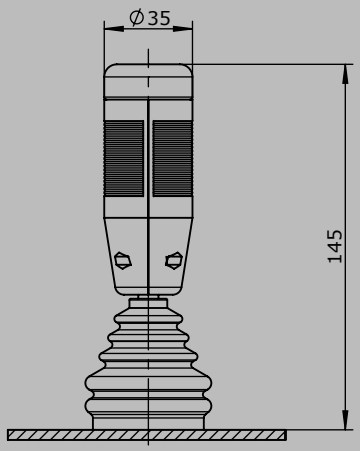

Hole pattern

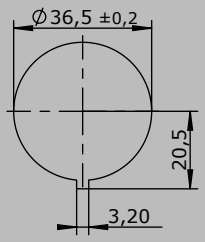

Type	No. of contacts	Maß B
02	3	62
03	5	72
04	7	83
05	9	93

Technical details may vary based on configuration or application! Technical data subject to change without notice!

V2015/1 10.02.2015

T = Dead man's button
H = Signal button
M = Latch for mechanical zero interlock

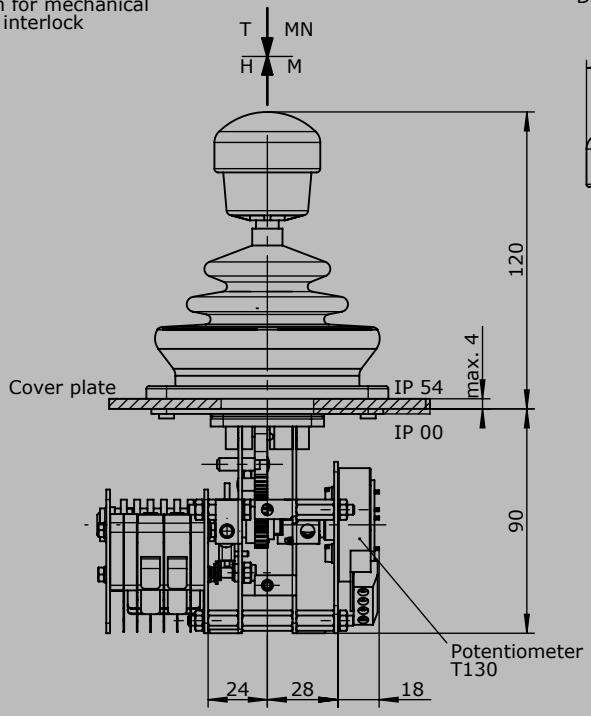

Knob solid
D= Push button

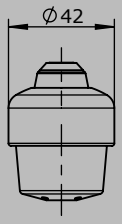

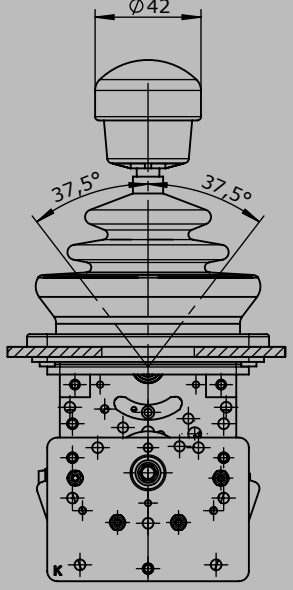

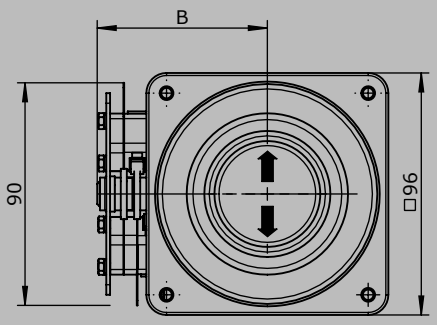

Hole pattern

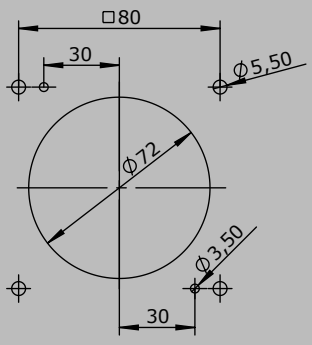

Palm grip B5
B5 T = Dead man's button

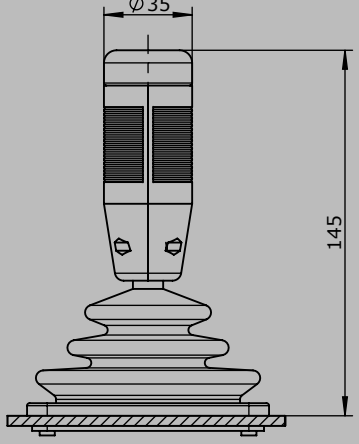

Type	No. of contacts	Maß B
02	3	62
03	5	72
04	7	83
05	9	93

Technical details may vary based on configuration or application! Technical data subject to change without notice!

Single-axis controller
S22 / SS22

GESSMANN Industrial Controllers

The single-axis controller S2/SS2 is a robust switching device for remote controlled and electrohydraulic applications.
The modular design of the switching device is universally applicable.
The single-axis controller is resistant to oil, maritime conditions e.g. offshore /vessels, UV radiation typically from the sun.

1

Technical data

Mechanical life S22	6 million operating cycles
Mechanical life SS22	10 million operating cycles
Operating temperature	-40°C til +60°C
Degree of protection	IP 54

Example

S22L	S5	T	- 3 Z P	- A050 P134	- X

Basic unit
S22L left

Control-handle extended
S5 -20 mm

Grip / palm grip
T Dead man

Axis 1 (direction 1-2)
3 3 contacts (2A 250V AC15)
Z Spring return
P Potentiometer

Description axis 1 (direction 1-2)
A050 Arrangement MSP 21
P134 Potentiometer T396 2x5 kOhm

Special model
X Special / customer-specific

S22L	S5	T	- 3 Z P	- A050 P134	- X

Basic unit
S22L Single-axis controller left
S22R Single-axis controller right
reinforced version
SS22L Single-axis controller left
SS22R Single-axis controller right

Control-handle extended
Standard
S5 -20 mm
S8 +20 mm

Identification of the installation variants with switching directions:

S22L / SS22L

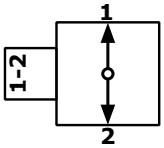

S22R / SS22R

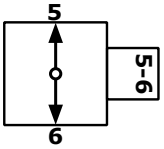

Technical details may vary based on configuration or application! Technical data subject to change without notice!

V2015/1 10.02.2015

Combination possibilities with our ball handles

		S22L	S5	T	- 3 Z P	- A050 P134	- X
Grip / palm grip							
	Knob (standard)						
M	Mechanical zero interlock						
MN	Mechanical zero interlock (push down)						
T	Dead man						
MT	Mechanical zero interlock + dead man						
H	Signal button						
MH	Mechanical zero interlock + signal button						
D	Push button						
MD	Mechanical zero interlock + push button						
DV	Flush push button						
MDV	Mechanical zero interlock + flush push button						
B...	Palm grip B... *(see page palm grip 128)*						

		S22L	S5	T	- 3 Z P	- A050	P134	- X
Axis 1: direction 1-2 left / direction 5-6 right								
1	1 contact	Standard contact - arrangement see page 106						
2	2 contacts	z.B.						
3	3 contacts	A98	MS 0					
4	4 contacts	A05	MS 21					
		A0500	MS 21-00					
		A99 contact - arrangement according customer request						
Z	Spring return							
R	Friction brake							
(P)	Possibility of mounting potentiometer and encoder (Gessmann-types)							
P	Potentiometer	P131	T396 2x0,5 kOhm	I max. 1 mA				
		P132	T396 2x1 kOhm	I max. 1 mA				
		P133	T396 2x2 kOhm	I max. 1 mA				
		P134	T396 2x5 kOhm	I max. 1 mA				
		P135	T396 2x10 kOhm	I max. 1 mA				
		More potentiometer on request!						
C	Codierer	C...Encoder see page 118						

S22L	S5	T	- 3 Z P	- A050 P134	- X

Special model

X	Special / customer-specific
X1	Switching run 2-0-2

1

Attachment

Indicating labels

Indicating labels with engraving

Technical details may vary based on configuration or application! Technical data subject to change without notice!

page 82

V2015/1 10.02.2015

T = Dead man's button
H = Signal button
M = Latch for mechanical zero interlock

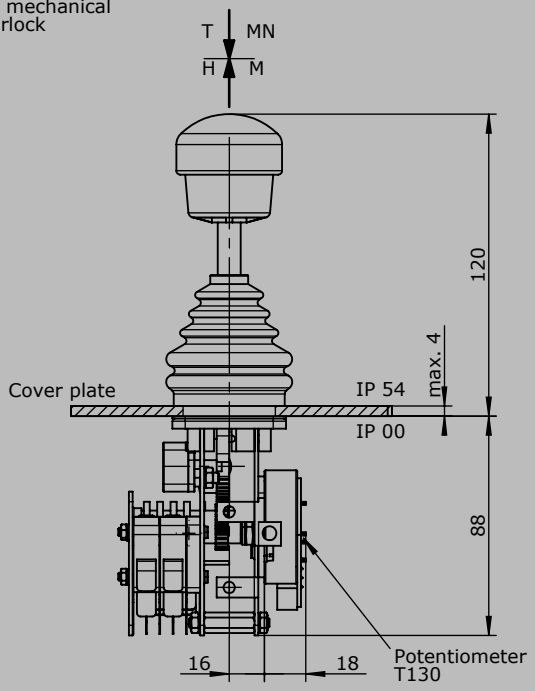

Knob solid
D= Push button

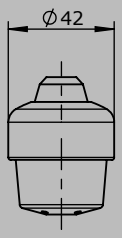

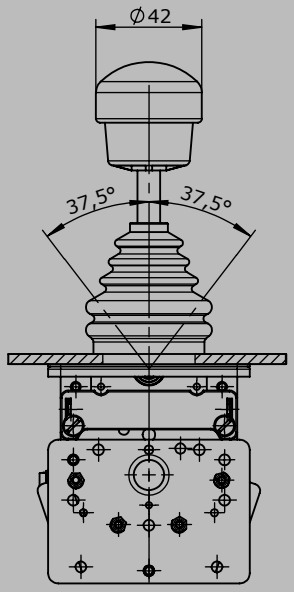

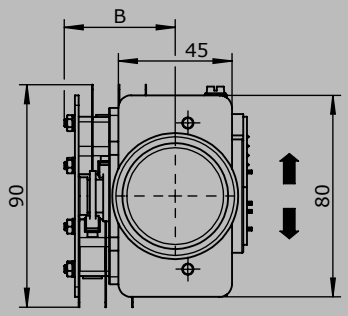

Palm grip B5
B5 T = Dead man's button

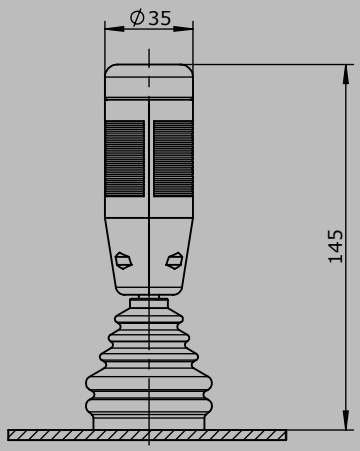

Hole pattern

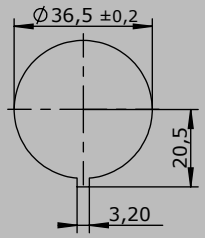

Type	No. of contacts	Dim. B
1	1	25
2	2	31
3	3	36
4	4	42

Technical details may vary based on configuration or application! Technical data subject to change without notice!

Single-axis controller
S23

GESSMANN Industrial Controllers

The single-axis controller S23 is a robust swithing device for shipbuilding and electro-hydraulic applications. The modular design of the switching device is universally applicable. The single-axis controller is resistant to oil, maritime conditions e.g. offshore / vessels, UV radiation typically from the sun.

Technical data

Mechanical life S23	6 million operating cycles
Operating temperature	-40°C til +60°C
Degree of protection	IP 65

Example

S23L	S5	M	- 3 Z P	- A050 P134	- X

Basic unit

S23L left

Control-handle extended

S5 -20 mm

Grip / palm grip

M Mechanical zero interlock

Axis 1 (direction 1-2)

3 3 contacts (2A 250V AC15)

Z Spring return

P Potentiometer

Description axis 1 (direction 1-2)

A050 Arrangement MSP 21-0

P134 Potentiometer T396 2x5 kOhm

Special model

X Special / customer-specific

S23L	S5	M	- 3 Z P	- A050 P134	- X

Basic unit

S23L left

S23R right

Control-handle extended

Standard 140 mm

S5 -20 mm

S8 +20 mm

Identification of the installation variants with switching directions:

S23

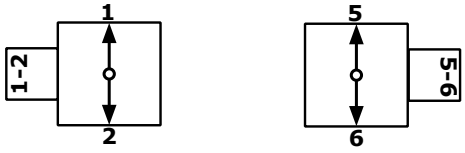

Technical details may vary based on configuration or application! Technical data subject to change without notice!

V2015/1 10.02.2015

		S23L	S5	M	- 3 Z P	- A050 P134	- X

Grip / palm grip

	Knob (standard)
M	Mechanical zero interlock
Q	T-grip
QM	T-grip with mechanical zero interlock

		S23L	S5	M	- 3 Z P	- A050 P134	- X

Axis 1: direction 1-2 left / direction 5-6 right

1	1 contact	Standard contact - arrangement see page 106		
2	2 contacts	z.B.		
3	3 contacts	A98	MS 0	
4	4 contacts	A05	MS 21	
		A0500	MS 21-00	
		A99 contact - arrangement according customer request		
Z	Spring return			
R	Friction brake			
(P)	Possibility of mounting potentiometer and encoder (Gessmann-types)			
P	Potentiometer	P131	T396 2x0,5 kOhm	I max. 1 mA
		P132	T396 2x1 kOhm	I max. 1 mA
		P133	T396 2x2 kOhm	I max. 1 mA
		P134	T396 2x5 kOhm	I max. 1 mA
		P135	T396 2x10 kOhm	I max. 1 mA
		More potentiometer on request!		
C	Encoder	C... Encoder see page 118		

		S23L	S5	M	- 3 Z P	- A050 P134	- X

Special model

X	Special / customer-specific

GESSMANN Industrial Controllers

1

M = Latch for mechanical zero interlock

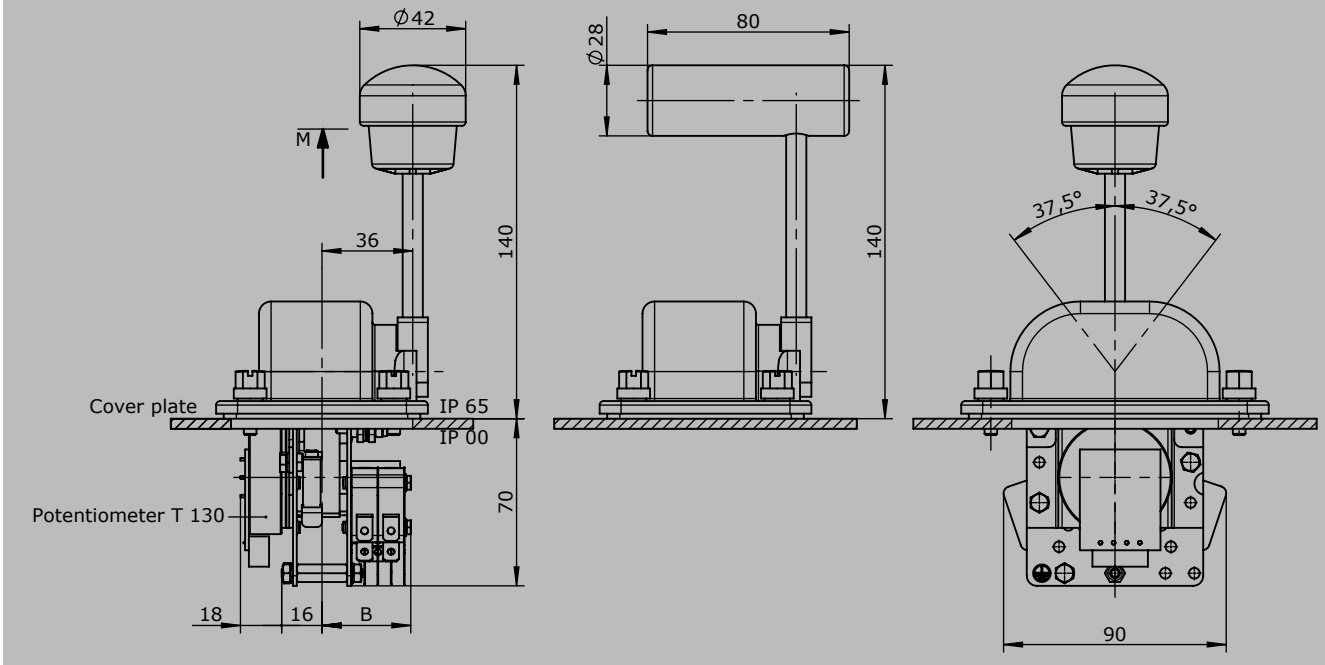

T - grip

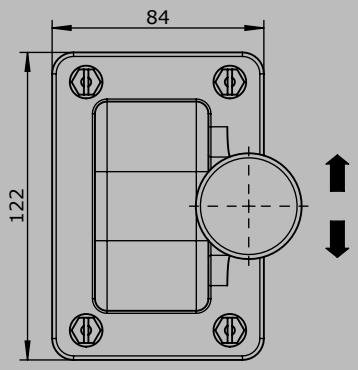

Hole pattern

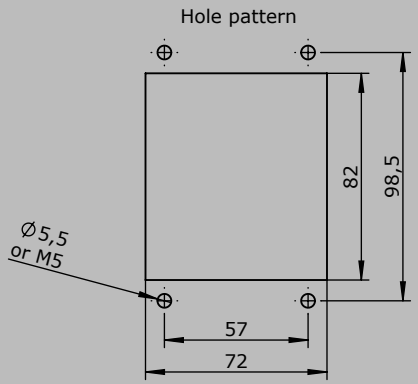

Type	No. of contacts	Dim. B
1	1	25
2	2	31
3	3	36
4	4	42

Technical details may vary based on configuration or application! Technical data subject to change without notice!

V2015/1 10.02.2015

Single-axis controller
S26

GESSMANN
Industrial Controllers

The single-axis controller S26 is a hall sensor switching device designed for electro-hydraulic and remote controlled hydraulic.
The modular design of the switching device is universally applicable.
The single-axis controller is resistant to oil, maritime conditions e.g. offshore /vessels, UV radiation typically from the sun.

Technical data

Mechanical life S26	6 million operating cycles
Operating temperature	-40°C til +60°C
Degree of protection	IP 54

1

Example

S26	T	- Z	- E...	- X

Basic unit

S26	1-axis

Grip / palm grip

	Knob
M	Mechanical zero interlock
T	Dead man
H	Signal button
D	Push button
B...	Palm grip B... *(see page palm grip 128)*

Z	Spring return
R	Friction brake

Interface *(description on the following pages)*

E0xx	Digital output
E1xx	Voltage output
E2xx	Current output

Special model

X	Special / customer-specific

Identification of the installation variants with switching directions:

S26

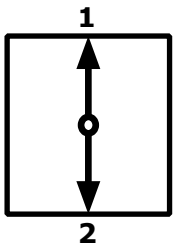

Technical details may vary based on configuration or application! Technical data subject to change without notice!

Single-axis controller
S26

GESSMANN Industrial Controllers

Combination possibilities with our ball handles

1

Digitale output

Supply voltage	9-32VDC
Current carrying capacity	Direction signal 150 mA
	Zero position signal 500 mA
Wiring	Cable 500 mm long with plug (pins) CPC 13 - 9-pole

2 direction signals + 1 zero position signal (galvanically isolated) per axis

1 axis	E001 1

Voltage output (not stabilized)

Supply voltage	4,75-5,25VDC
Current carrying capacity	Direction signal 8 mA
Wiring	Cable 500 mm long with plug (pins) CPC 13 - 9-pole

Characteristic: 1 = contra rotating, 2 = concurrently rotating

0,5...2,5...4,5V redundant + 2 direction signal per axis

1 axis	E104 1 ☐

Voltage output

Supply voltage	9-32VDC (*11,5-32V)
Current carrying capacity	Direction signal 150 mA
	Zero position signal 500 mA
Wiring	Cable 500 mm long with plug (pins) CPC 13 - 9-pole

Characteristic: 1 = contra rotating, 2 = concurrently rotating

0,5...2,5...4,5V redundant + 2 direction signal + 1 zero position signal (galvanically isolated) per axis

1 axis	E112 1 ☐

0...5...10V redundant + 2 direction signal + 1 zero position signal (galvanically isolated) per axis, supply voltage 11,5 - 32VDC

1 axis	E132 1 ☐

10...0...10V redundant + 2 direction signal + 1 zero position signal (galvanically isolated) per axis, supply voltage 11,5 - 32VDC, sensor redundant, 1 output with signal monitoring

1 axis	E136 1

Voltage output with other value on request!

Technical details may vary based on configuration or application! Technical data subject to change without notice!

V2015/1 10.02.2015

Current output			
Supply voltage	9-32VDC		
Current carrying capacity	Direction signal 150 mA		
	Zero position signal 500 mA		
Wiring	Cable 500 mm long with plug (pins) CPC 13 - 9-pole		
0...10...20mA redundant + 2 direction signal + 1 zero position signal (galvanically isolated) per axis, sensor redundant, 1 output with signal monitoring			
		1 axis	E206 1
20...0...20mA redundant + 2 direction signal + 1 zero position signal (galvanically isolated) per axis, sensor redundant, 1 output with signal monitoring			
		1 axis	E208 1
4...12...20mA redundant + 2 direction signal + 1 zero position signal (galvanically isolated) per axis, sensor redundant, 1 output with signal monitoring			
		1 axis	E214 1
20...4...20mA redundant + 2 direction signal + 1 zero position signal (galvanically isolated), per axis, sensor redundant, 1 output with signal monitoring			
		1 axis	E216 1
Current output with other value on request!			

Attachment	
Mating connector AMP CPC 13 9-pole (pins-contact)	5300000479
Mating connector AMP CPC 13 9-pole (pins-contact) with 2 m cable	5300000480

1

T = Dead man's button
H = Signal button
M = Latch for mechanical zero interlock

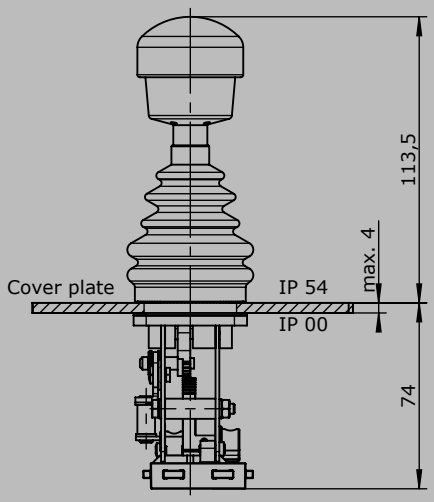

Knob solid
D= Push button

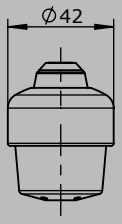

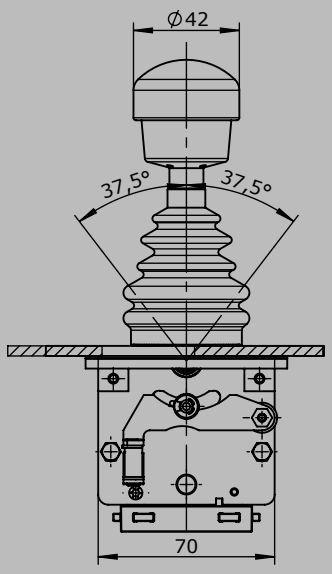

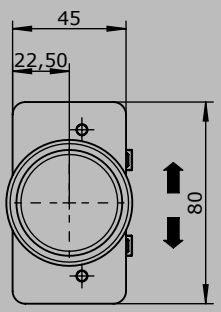

Palm grip B5
B5 T = Dead man's button

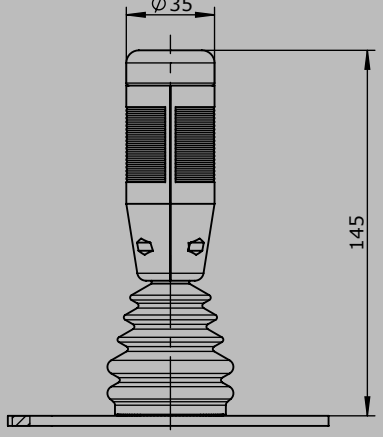

Hole pattern

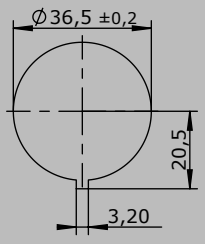

Technical details may vary based on configuration or application! Technical data subject to change without notice!

V2015/1 10.02.2015

Single-axis controller
S27

GESSMANN Industrial Controllers

The single-axis controller S27 is a hall sensor switching device designed for electro-hydraulic and remote controlled hydraulic.
The modular design of the switching device is universally applicable.
The single-axis controller is resistant to oil, maritime conditions e.g. offshore /vessels, UV radiation typically from the sun.

Example

Technical data

Mechanical life S27	6 million operating cycles
Operating temperature	-40°C til +60°C
Degree of protection	IP 65

	S27L	T	- Z	- E...	- X
Basic unit					
S27L left					
S27R right					
Grip / palm grip					
Knob (standard)					
M Mechanical zero interlock					
Q T-grip					
Z Spring return					
R Friction brake					
Interface *(description on the following pages)*					
E0xx Digital output					
E1xx Voltage output					
E2xx Current output					
Special model					
X Special / customer specific					

Identification of the installation variants with switching directions:

S27 left

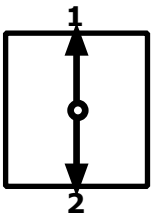

S27 right

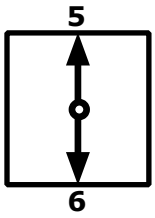

Technical details may vary based on configuration or application! Technical data subject to change without notice!

1

Digital output			
Supply voltage	9-32VDC		
Current carrying capacity	Direction signal 150 mA		
	Zero position signal 500 mA		
Wiring	Cable 500 mm long with plug (pins) CPC 13 - 9-pole		
2 direction signals + 1 zero position signal (galvanically isolated) per axis			
		1 axis	E001 1

Voltage output (not stabilized)			
Supply voltage	4,75-5,25VDC		
Current carrying capacity	Direction signal 8 mA		
Einbautiefe A	60 mm		
Wiring	Cable 500 mm long with plug (pins) CPC 13 - 9-pole		
		Characteristic: 1 = contra rotating, 2 = concurrently rotating	
0,5...2,5...4,5V redundant + 2 direction signal per axis			
		1 axis	E104 1 ☐

Voltage output			
Supply voltage	9-32VDC (*11,5-32V)		
Current carrying capacity	Direction signal 150 mA		
	Zero position signal 500 mA		
Wiring	Cable 500 mm long with plug (pins) CPC 13 - 9-pole		
		Characteristic: 1 = contra rotating, 2 = concurrently rotating	
0,5...2,5...4,5V redundant + 2 direction signal + 1 zero position signal (galvanically isolated) per axis			
		1 axis	E112 1 ☐
00...5...10V redundant + 2 direction signal + 1 zero position signal (galvanically isolated) per axis, supply voltage 11,5 - 32VDC			
		1 axis	E132 1 ☐
10...0...10V redundant + 2 direction signal + 1 zero position signal (galvanically isolated) per axis, supply voltage 11,5 - 32VDC, sensor redundant, 1 output with signal monitoring			
		1 axis	E136 1

Voltage output with other value on request!

Current output			
Supply voltage	9-32VDC		
Current carrying capacity	Direction signal 150 mA		
	Zero position signal 500 mA		
Wiring	Cable 500 mm long with plug (pins) CPC 13 - 9-pole		
0...10...20mA redundant + 2 direction signal + 1 zero position signal (galvanically isolated) per axis, sensor redundant, 1 output with signal monitoring		1 axis	E206 1
20...0...20mA redundant + 2 direction signal + 1 zero position signal (galvanically isolated) per axis, sensor redundant, 1 output with signal monitoring		1 axis	E208 1
4...12...20mA redundant + 2 direction signal + 1 zero position signal (galvanically isolated) per axis, sensor redundant, 1 output with signal monitoring		1 axis	E214 1
20...4...20mA redundant + 2 direction signal + 1 zero position signal (galvanically isolated) per axis, sensor redundant, 1 output with signal monitoring		1 axis	E216 1
Voltage output with other value on request!			

Attachment	
Mating connector AMP CPC 13 9-pole (pins-contact)	5300000479
Mating connector AMP CPC 13 9-pole (pins-contact) with 2 m cable	5300000480

Technical details may vary based on configuration or application! Technical data subject to change without notice!

GESSMANN Industrial Controllers

1

M = Latch for mechanical zero interlock

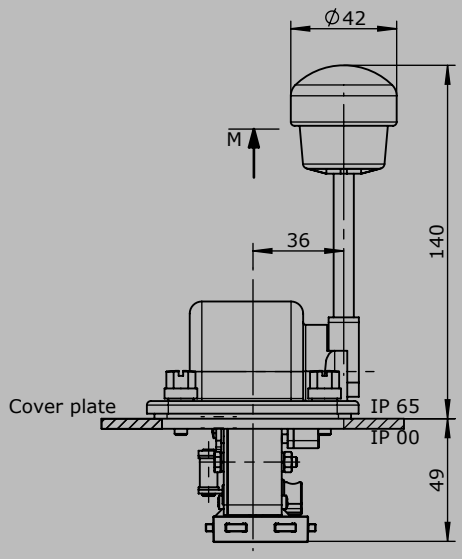

T - grip

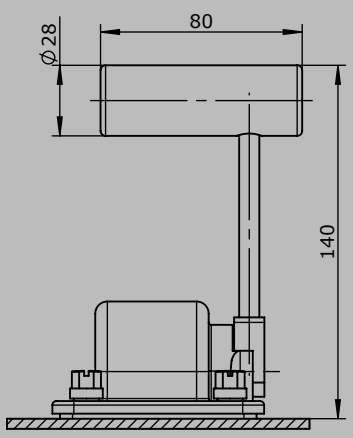

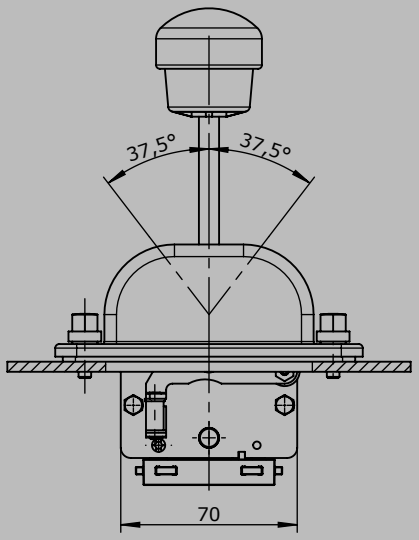

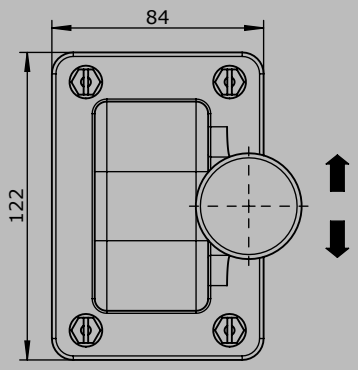

Hole pattern

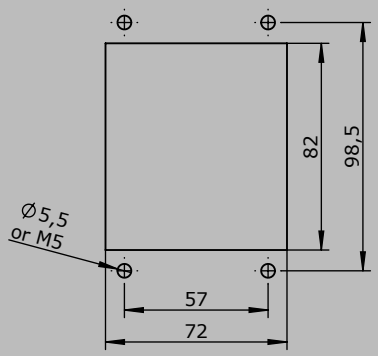

Technical details may vary based on configuration or application! Technical data subject to change without notice!

V2015/1 10.02.2015

Single-axis control
S3

GESSMANN Industrial Controllers

The single-axis control S3 is a rugged switching device for hoisting applications.
The modular design enables the switching device to be used universally.
The single-axis controller is resistant to oil, maritime conditions e.g. offshore /vessels, UV radiation typically from the sun.

Technical data

Mechanical life S3	12 million operating cycles
Operating temperature	-40°C til +60°C
Degree of protection	IP 66 front

1

Example

S3L	S5	Q	- 2 R P	- B	- A05 P214	- E1291	- X

Basic unit

S3L	Single-axis controller left

Control-handle extended

S5	-20 mm

Grip- control-handle left

Q	T-grip

Axis 1

2	2 contacts (1,5A 24VDC13)
R	Friction brake
P	Potentiometer

Cover housing

B	Cover housing

Description axis 1 (direction 1-2)

A05	Arrangement MSP 21
P214	Potentiometer T246 2x5 kOhm

Interface

E1291	Voltage output 0...5...10V

Special model

X	Special / customer-specific

Technical details may vary based on configuration or application! Technical data subject to change without notice!

Single-axis controller
S3

GESSMANN Industrial Controllers

1

S3L	S5	Q	- 2 R P	- B	- A05	P214	- E1291	- X

Basic unit

S3L	Single-axis controller, control-handle left
S3R	Single-axis controller, control-handle right

Control-handle extended*

	Standard 148 mm
S5	-20 mm
S8	+20 mm

**Only possible in combination with handle!*

Grip

	Knob
D	Push button
Q	T-grip
QD	T-grip with push button side

Identification of the installation variants with switching directions:

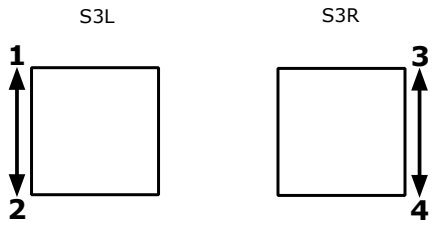

S3L	S5	Q	- 2 R P	- B	- A05	P214	- E1291	- X

Axis 1: direction 1-2 left

1	1 contact	Standard contact - arrangement see page 106		
2	2 contacts	z.B.		
3	3 contacts	A98		
		A05		
		A050		
		A99 contact - arrangement according customer request		
R	Friction brake			
(P)	Possibility of mounting potentiometer and encoder (Gessmann-types)			
P	Potentiometer	P211	T246 2x0,5 kOhm	I max. 1 mA
		P212	T246 2x1 kOhm	I max. 1 mA
		P214	T246 2x5 kOhm	I max. 1 mA
		P215	T246 2x10 kOhm	I max. 1 mA
		More potentiometer on request!		
	Hall-Potentiometer	P42	T1003	

S3L	S5	Q	- 2 R P	- B	- A05	P214	- E1291	-	X

Cover housing

B	Cover housing

Interface *(description on the following pages)*

	Potentiometer output
E1xx	Voltage output
E2xx	Current output

Special model

X	Special / customer-specific

Technical details may vary based on configuration or application! Technical data subject to change without notice!

V2015/1 10.02.2015

Voltage output				
Supply voltage	11,5-32VDC			
Wiring	Cable 500 mm long with plug (pins) CPC 17 - 14-pole			
0...5...10V per axis				
		1 axis	E129 1	☐
10...0...10V per axis				
		1 axis	E141 1	☐
-10...0...+10V per axis				
		1 axis	E140 1	☐
Voltage output with other value on request!				

Current output				
Supply voltage	18-36VDC			
Wiring	Cable 500 mm long with plug (pins) CPC 17 - 14-pole			
4...12...20 mA per axis				
		1 axis	E209 1	
20...4...20 mA per axis				
		1 axis	E217 1	

Attachment	
Mating connector AMP CPC 13 9-pole (socket-contact)	5300000209
Mating connector AMP CPC 13 9-pole (socket-contact) with 2 m cable	5300000210

Technical details may vary based on configuration or application! Technical data subject to change without notice!

T - grip
D= Push button

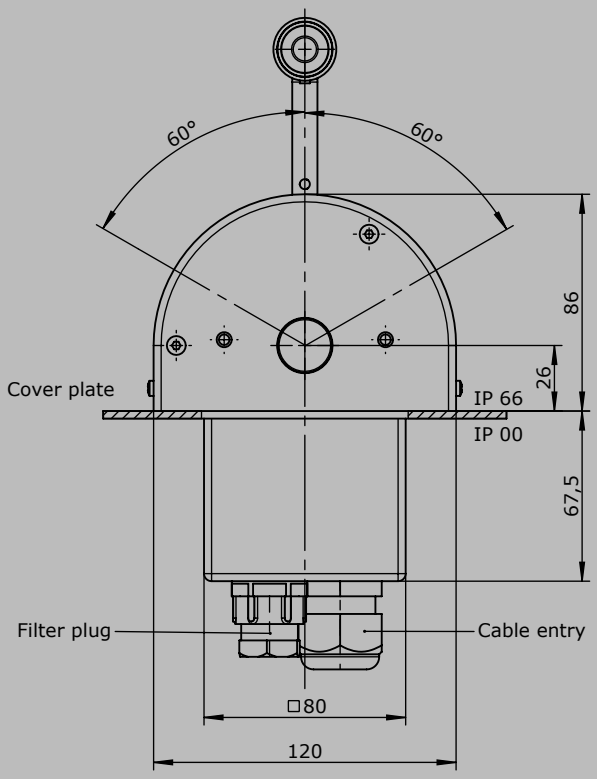

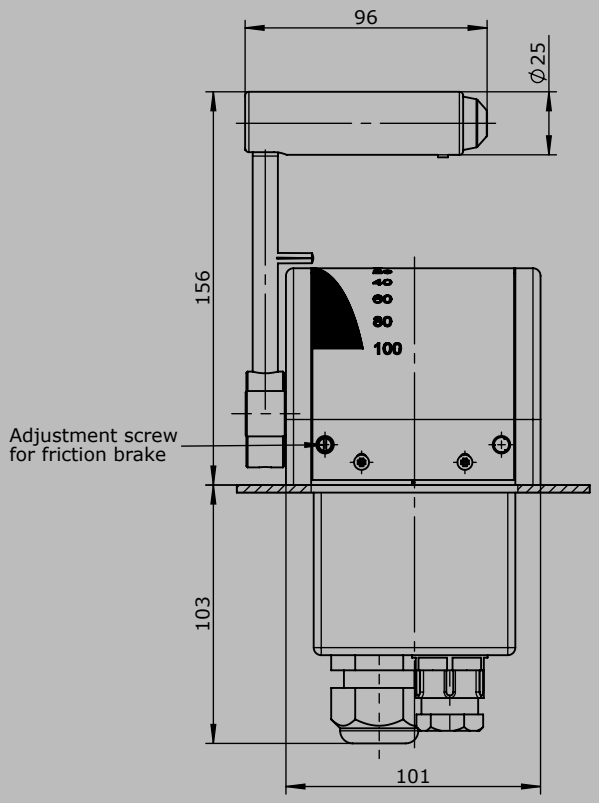

Hole pattern

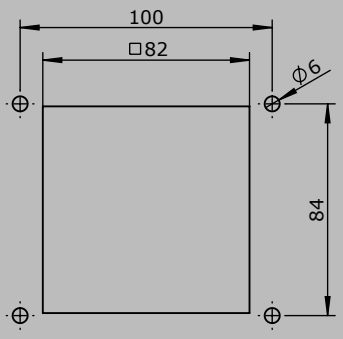

Knob solid
D= Push button

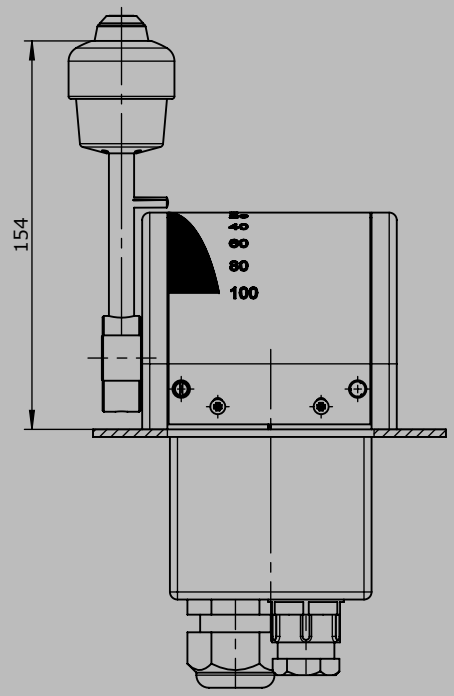

Technical details may vary based on configuration or application! Technical data subject to change without notice!

V2015/1 10.02.2015

Single-axis controller
S9

GESSMANN Industrial Controllers

The single-axis controller S9 is a hallsensor switching device designed for electro-hydraulic applications.
Due to its small size, the S9 is particularly suitable for installation in our ball handles.
The single-axis controller is resistant to oil, maritime conditions e.g. offshore /vessels, UV radiation typically from the sun.

Technical data

Mechanical life S9	5 million operating cycles
Operating force	1,6 til 3,5N
Supply voltage	5VDC stabilized
Operating temperature	-40°C til +60°C
Degree of protection	IP 67

Example

S9	- E10311	- X

Basic unit

S9

Interface

Voltage output

E	1031	☐	0,5...2,5...4,5V redundant at Ub=5V	1 axis
			characteristic: 1 = contra rotating, 2 = concurrently rotating	

Special model

X Special / customer-specific

Technical details may vary based on configuration or application! Technical data subject to change without notice!

Installed from the top

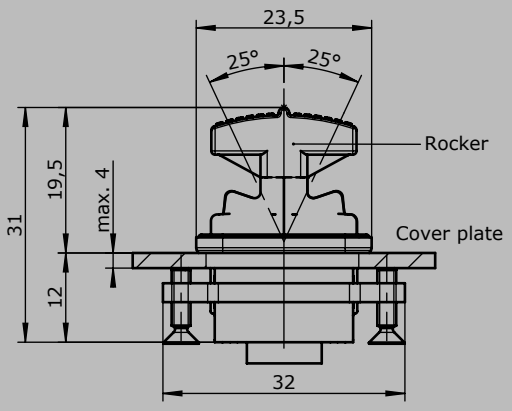

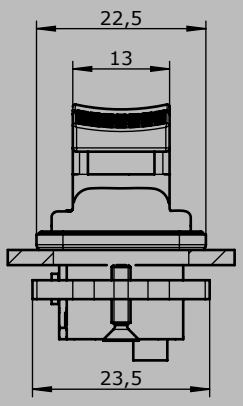

Hole pattern
(installed from the top)

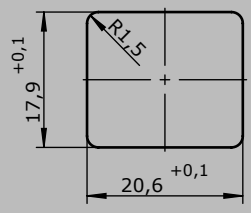

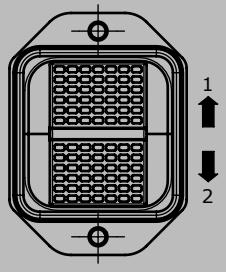

Installed from below

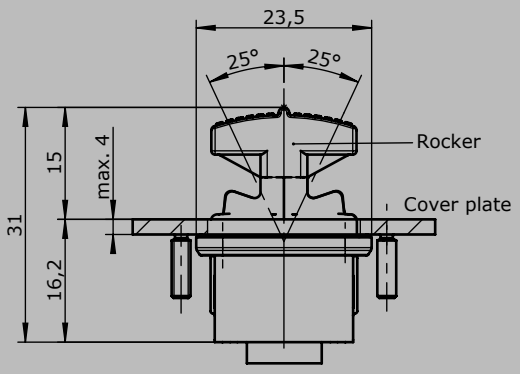

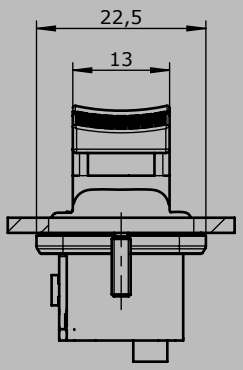

Hole pattern
(installed from below)

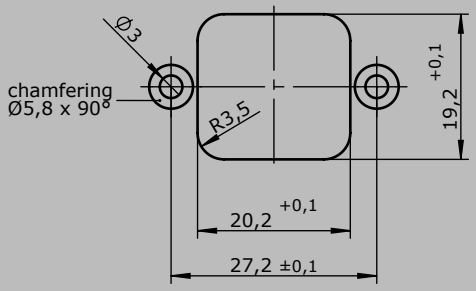

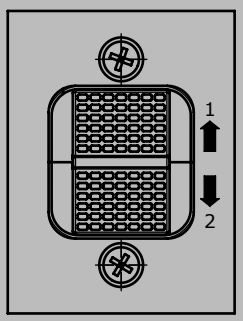

Technical details may vary based on configuration or application! Technical data subject to change without notice!

V2015/1 10.02.2015

Control switch
N6

GESSMANN Industrial Controllers

The control-switch N6 is a rugged switching device for hoisting applications.
The modular design enables the switching device to be used universally.
The single-axis controller is resistant to oil, maritime conditions e.g. offshore /vessels, UV radiation typically from the sun.

Technical data

Mechanical life N6	10 million operating cycles
Operating temperature	-40°C til +60°C
Degree of protection	IP 54

Example

N6	- DG	- 01 Z P	- A05 P134	- X

Basic unit

N6	incl. ISO-front plate 88x88 mm

Grip

DG	Twist grip

Axis 1 (direction 2-4)

01	2 contacts (2A 250V AC15)
Z	Spring return
P	Potentiometer

Description axis 1 (direction 3-4)

A05	Arrangement MSP 21
P134	Potentiometer T396 2x5 kOhm

Special model

X	Special / customer-specific

Technical details may vary based on configuration or application! Technical data subject to change without notice!

Control switch
N6

GESSMANN Industrial Controllers

1

	N6	- DG	- 01 Z P	- A05	P134	- X

Basic unit

N6	incl. ISO-front plate 88x88 mm
N6A	incl. ISO-front plate 88x88 mm, IP65 (front)

Grip

KN	Knob
HG	Ball grip
DG	Twist grip

Axis 1: direction 3-4

(Standard contacts gold-plated 2A 250V AC15)

01	2 contacts	Standard contact - arrangement see page 106		
02	4 contacts	z.B.		
03	6 contacts	A980	MS 00	
04	8 contacts	A05	MS 21	
05	10 contacts	A0500	MS 21-00	
06	12 contacts	A110	MS 24-0	
	A = silver contacts (4A 250V AC15)	*A99 contacts - arrangement according customer request*		

Z	Spring return			
R	Friction brake			
(P)	Possibility of mounting potentiometer and encoder (Gessmann-types)			
P	Potentiometer	P131	T396 2x0,5 kOhm	I max. 1 mA
		P132	T396 2x1 kOhm	I max. 1 mA
		P133	T396 2x2 kOhm	I max. 1 mA
		P134	T396 2x5 kOhm	I max. 1 mA
		P135	T396 2x10 kOhm	I max. 1 mA
		More potentiometer on request!		
C		C... Encoder see page 118		

	N6	- DG	- 01 Z P	- A05	P134	- X

Special model

X	Special / customer-specific

Attachment

Indicating label
Indicating label with engraving

Knob

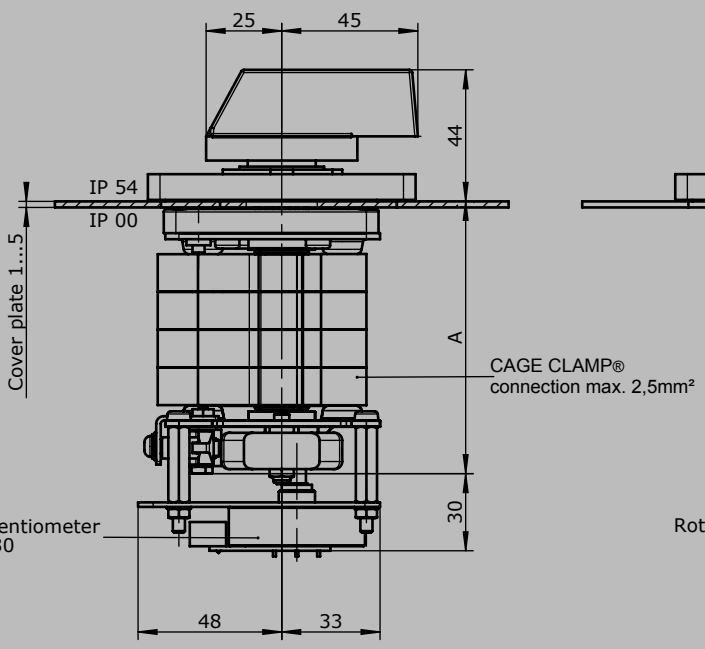

Ball - handle

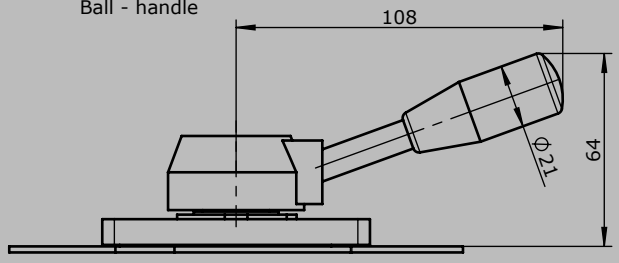

Rotary mechanism

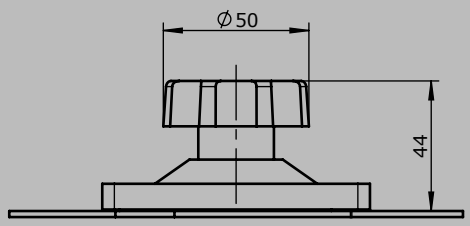

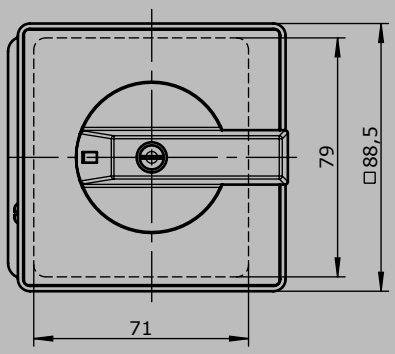

Hole pattern

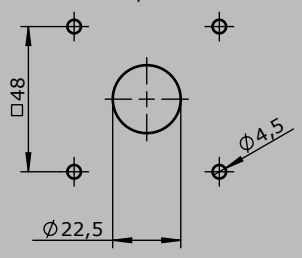

Type	No. of contacts	Dim. A	Spring return
01	2	53	+25
02	4	65	
03	6	78	
04	8	90	
05	10	103	
06	12	115	

Technical details may vary based on configuration or application! Technical data subject to change without notice!

Control switch
N9

GESSMANN Industrial Controllers

The control-switch N9 is a rugged switching device for hoisting applications.
The modular design enables the switching device to be used universally.

Technical data

Mechanical life N9	10 million operating cycles
Operating temperature	-40°C til +60°C
Degree of protection	IP 54

1

Example

N9	- 02 R P	- A05	P134	- X

Basic unit

N9	Control switch with twist grip

Axis 1: direction 3-4

1	1 contact	Standard contact - arrangement see page 106		
2	2 contacts	z.B.		
		A98	MS 0	
		A05	MS 21	
		A99 contacts - arrangement according customer request		
R	Friction brake			
(P)	Possibility of mounting potentiometer and encoder (Gessmann-types)			
P	Potentiometer	P131	T396 2x0,5 kOhm	I max. 1 mA
		P132	T396 2x1 kOhm	I max. 1 mA
		P133	T396 2x2 kOhm	I max. 1 mA
		P134	T396 2x5 kOhm	I max. 1 mA
		P135	T396 2x10 kOhm	I max. 1 mA
		More potentiometer on request!		
	Hall-Potentiometer	P43	T1360 0,5...2,5...4,5V / 4,5...2,5...0,5V	

Special model

X	Special / customer-specific

Technical details may vary based on configuration or application! Technical data subject to change without notice!

V2015/1 10.02.2015

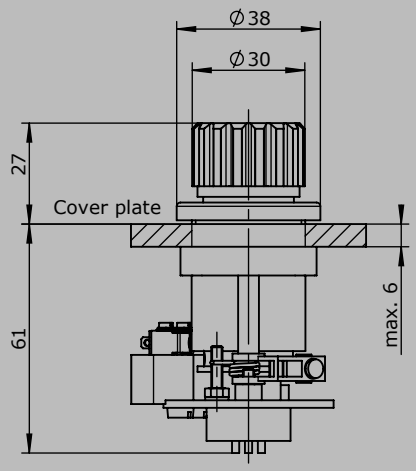

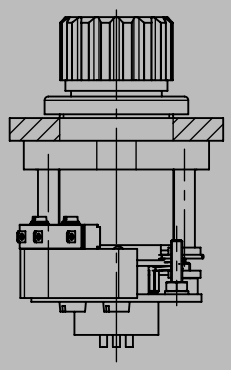

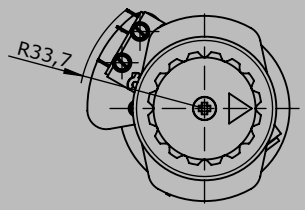

Hole pattern

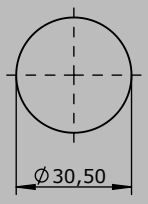

Technical details may vary based on configuration or application! Technical data subject to change without notice!

Standard contact-arrangement for master switch

GESSMANN Industrial Controllers

1

Type		Type
MS 11	° ° 3 03	A01
MS 12	° ° 3 03 ° ° 2 02	A02
MS 13	° ° 3 03 ° ° 2 02 ° ° 4 04	A03
MS 14	° ° 3 03 ° ° 2 02 ° ° 4 04 ° ° 6 06	A04
MS 21	° ° 3 03 ° ° 5 05	A05
MS 22	° ° 3 03 ° ° 5 05 ° ° 2 02	A06
MS 212	° ° 3 03 ° ° 5 05 ° ° 2 02 ° ° 4 04	A07
MS 222	° ° 3 03 ° ° 5 05 ° ° 2 02 ° ° 4 04	A08
MS 23	° ° 3 03 ° ° 5 05 ° ° 7 07 ° ° 9 09	A09
MS 213	° ° 3 03 ° ° 5 05 ° ° 2 02 ° ° 20 020 ° ° 4 04 ° °40 040	A10

Type		Type
MS 24	° ° 3 03 ° ° 5 05 ° ° 2 02 ° ° 4 04 ° ° 6 06	A11
MS 214	° ° 3 03 ° ° 5 05 ° ° 2 02 ° ° 20 020 ° ° 4 04 ° ° 40 040 ° ° 6 60 ° ° 60 060	A12
MS 224	° ° 3 03 ° ° 5 05 ° ° 2 02 ° ° 4 04	A13
MS 25	° ° 3 03 ° ° 5 05 ° ° 2 02 ° ° 4 04 ° ° 6 06 ° ° 8 08	A14
MS 26	° ° 3 03 ° ° 5 05 ° ° 2 02 ° ° 4 04 ° ° 6 06 ° ° 8 08 ° ° 10 010	A15
MS 0	° ° 0 1	A98

Contact arrangement special

Mechanical zero interlock

Break contact

° ° 0 1 — A...0

Technical details may vary based on configuration or application! Technical data subject to change without notice!

V2015/1 10.02.2015

Standard contact-arrangement for master switch

Mechanical zero interlock

Front contact

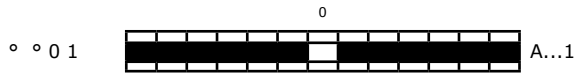

Potentiometer MSP

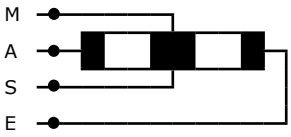

Micro change over contact for control handle with dead man`s button signal button push button

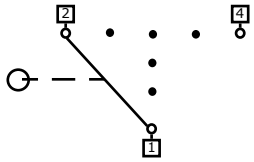

contact 5 05 = direction 1/4/5/8

contact 3 03 = direction 2/3/6/7

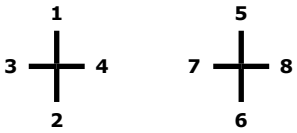

Deflection directions designated

DIN 15025

Technical details may vary based on configuration or application! Technical data subject to change without notice!

Ordering information

GESSMANN Industrial Controllers

Customer _____ Order No. _____

1

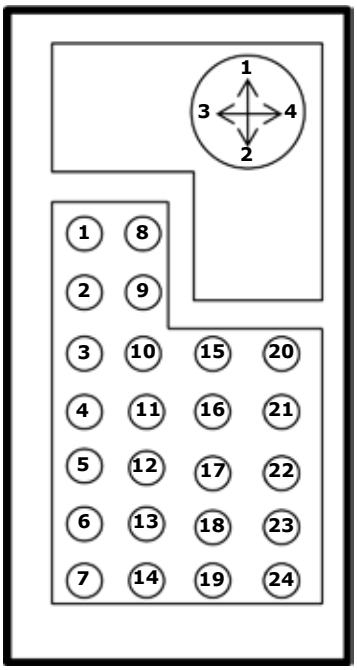

Maximum installation of command and indicating devices 22 (see 1/360) in our control units and housings if our multi-axis controllers V62 (see 1/100) are used. Additional command and indicating devices can be installed of multi-axis controllers V64 or V11 (see 1/100) are used. (please enquire)

Equipment box left Pos. No.	Type	Colour	Label text (max. 2 x 12 characters)	Plant ref.	Destination	Notes
1						
2						
3						
4						
5						
6						
7						
8						
9						
10						
11						
12						
13						
14						
15						
16						
17						
18						
19						
20						
21						
22						
23						
24						

Control unit (see 2/030ff.) Type		No. of pieces max.
KST 3	1 - 6, 8 - 13, 15 - 18	16
KST 41/181	1 - 5, 10 - 12	8
KST 42/182	1 - 5, 8 - 12, 15 - 17	13
KST 51/151	3 - 7, 10 - 14, 15 - 19, 20 - 24	20
KST 52/53/54/152/154	1 -24	24
KST 6	3 - 4, 10 - 11, 15 - 16	6
KST 7	1 - 24	24
KST 75	1 - 19	19

Technical details may vary based on configuration or application! Technical data subject to change without notice!

V2015/1 10.02.2015

Ordering information

GESSMANN Industrial Controllers

Customer _____ Order No. _____

Pos. No.	Type	Colour	Label text (max). 2 x 12 characters)	Plant ref.	Desti-nation	Notes
1						
2						
3						
4						
5						
6						
7						
8						
9						
10						
11						
12						
13						
14						
15						
16						
17						
18						
19						
20						
21						
22						
23						
24						

Equipment box right

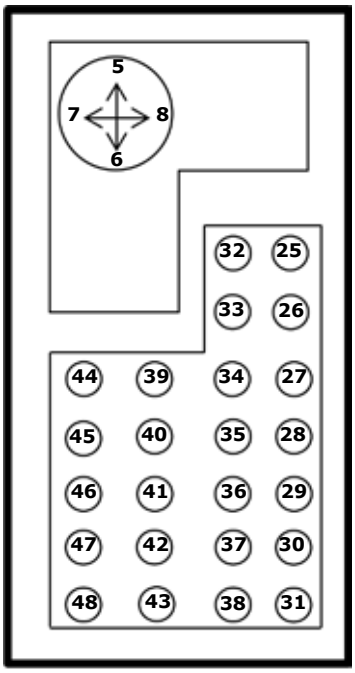

Maximum installation of command and indicating devices 22 (see 1/360) in our control units and housings if our multi-axis controllers V62 (see 1/100) are used. Additional command and indicating devices can be installed if multi-axis controllers V64 or V11 (see 1/110) are used. (please enquire)

	No. of pieces max.	Control unit (see 2/030ff.) Type
25 - 30, 32 - 37, 39 - 42	16	KST 3
25 - 29, 34 - 36	8	KST 41/181
25 - 29, 32 - 36, 39 - 41	13	KST 42/182
27 - 31, 34 - 38, 39 - 43, 44 - 48	20	KST 51/151
25 - 48	24	KST 52/53/54/152/154
27 - 28, 34 - 35, 39 - 40	6	KST 6
25 - 48	24	KST 7
25 - 43	19	KST 75

Technical details may vary based on configuration or application! Technical data subject to change without notice!

Ordering information KST 8, 85

GESSMANN Industrial Controllers

Customer _____ Order No. _____

1

Equipment box left

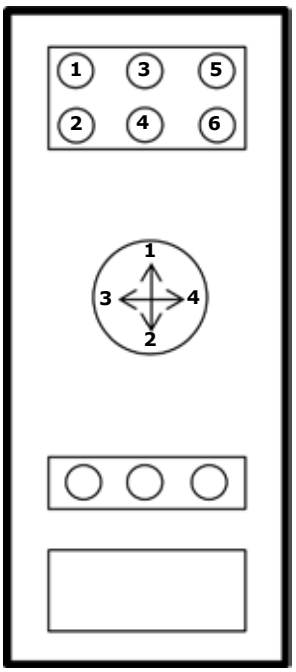

Pos. No.	Type	Colour	Lable text (max). 2 x 12 characters)	Plant ref.	Desti-nation	Notes
Max. 6 pcs. installation of command and indicating devices 22 (see 1/360) or 1 pcs. monitoring device 72 x 72 mm						
1						
2						
3						
4						
5						
Multi-axis controller V64 (see 1/100) or V11 (see 1/110)						
6						
7						
8						
Max. 3 pcs. installation of command and indicating devices 22 (see 1/360)						
9						
10						
11						
Place to put on devices						
12						

Equipment box right

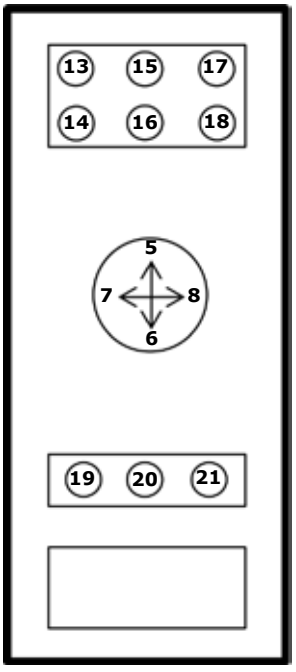

Max. 6 pcs. installation of command and indicating devices 22 (see 1/360) or 1 pcs. monitoring device 72 x 72 mm						
13						
14						
15						
16						
17						
Multi-axis controller V64 (see 1/100) or V11 (see 1/110)						
18						
19						
20						
Max. 3 pcs. installaion of command and indicatin devices 22 (see 1/360)						
21						
22						
23						
Place to put on devices						
24						

Technical details may vary based on configuration or application! Technical data subject to change without notice!

Ordering information KST 10

GESSMANN Industrial Controllers

Customer _____ Order No. _____

Equipment box left

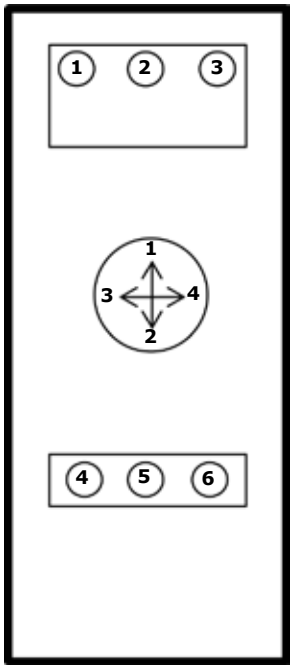

Pos. No.		Type	Colour	Label text (max). 2 x 12 characters	Plant ref.	Desti-nation	Notes
1	Max. 3 pcs. installation of command and indicating devices 22 (see 1/360)						
2							
3							
4							
5	Multi-axis con-troller V11, V14, V25, V85 (see 1/110ff)						
6							
7							
8							
9							
	Max. 3 pcs. installation of command and indicating devices 22 (see 1/360)						

Equipment box right

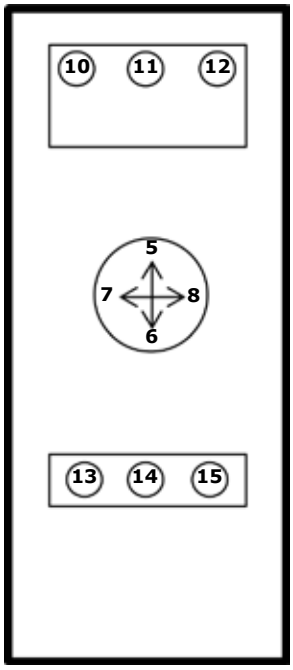

13	Max. 3 pcs. installation of command and indicating devices 22 (see 1/360)						
14							
15							
16							
17	Multi-axis con-troller V11, V14, V25, V85 (see 1/110ff)						
18							
	Max. 3 pcs. installation of command and indicating devices 22 (see 1/360)						

Technical details may vary based on configuration or application! Technical data subject to change without notice!

Order information KST 19

GESSMANN Industrial Controllers

Customer _____ Order No. _____

1

Equipment box left	Pos. No.	Type	Colour	Label text (max). 2 x 12 characters)	Plant-ref.	Desti-nation	Notes
Multi-axis controller V11, V14, V25, V85 see 1/11 0ff.	1						
	2						
max. 7 installations of command and indicating devices 22 (see 1/360)	3						
	4						
	5						
	6						
	7						
	8						
	9						

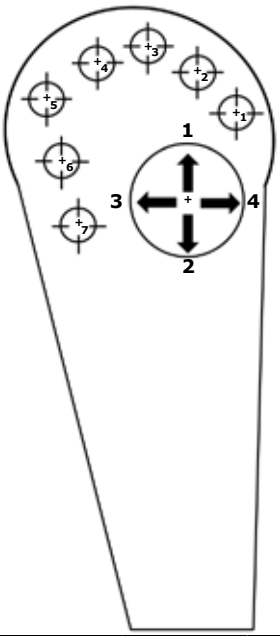

Equipment box right							
Multi-axis controller V11, V14, V25, V85 see 1/110ff.	25						
	26						
max. 7 installations of command and indicating devices 22 (see 1/360)	27						
	28						
	29						
	30						
	31						

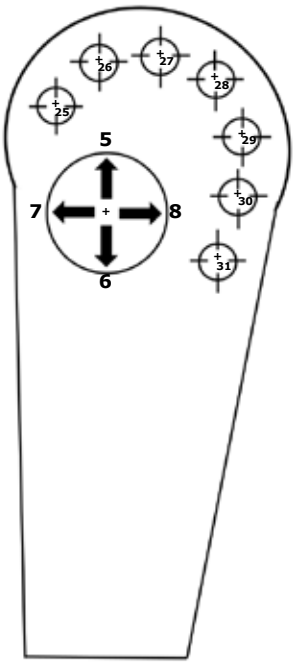

Technical details may vary based on configuration or application! Technical data subject to change without notice!

V2015/1 10.02.2015

Utilization categories for control switches to IEC/EN 60947-5-1

Type of current	Utilization category	Typical examples of application	Normal conditions of use					
		I= current made, Ic= current broken Ie= rated operational current, U= voltage before make Ue= rated operational voltage Ur= recovery voltage T 0,95= time in ms, to reach 95% of the steady-state current. P= UE · Ie= steady-state power consumption in watts	Make			Breake		
			I / Ie	U / Ue	cos	Ic / Ie	Ur / Ue	cos
alternating current	AC12	Control of resistive loads and solid state loads with isolation by opto couplers control of a.c. electromagnetic loads (> 72 VA)	1	1	0,9	1	1	0,9
	AC15		10	1	0,3	1	1	0,3
			I / Ie	U / Ue	t 0,95	Ic / Ie	Ur / Ue	t 0,95
Direct current	DC 12	Control of resistive loads and solid state loads with isolation by opto couplers Control of d.c. electromagnets	1	1	1 ms	1	1	1 ms
	DC 13		1	1	6 · P	1	1	6 · P

The value 6·P results from an empirical relationship with is found to represent most d.c. magnetic loads to an upper limit of P = 50 W viz 6·P = 300 ms. Loads having power consumption greater than 50 W are assumed to consist of smaller loads in parallel. Therefore 300 ms is to be an upper limit, irrespective of the power consumption value.

Attach our switching device		**V6 N6 S6 N61 N62**	**VV6 DD64**	**V11**	**V5 S2-S23**	**VV5 SS2-SS21**
Rated isolation voltage Ui in Volt		250	250	250	250	250
Rated operational voltage Ue in Volt		250	250	250	250	250
Rated operational voltage in Ampere	Ie AC 12	6 or 16	6 or 16	6 or 16	10	10
	AC 15	2 4	2 4	2 4	2 4	2
DC 12	24 V	6 8	6 8	6 8	4	4
	48V	2 4	2 4	2 4	2 4	2
	110V	0,5 1	0,5 1	0,5 1	0,2 1	0,2
	220V	0,1 0,5	0,1 0,5	0,1 0,5	0,1 0,5	0,1
Contacts gold-coated	24V	5 mA	5 mA	5 mA	5 mA	5 mA
DC 13	24V	1	1	1	3	3
	48V	0,5	0,5	0,5	1,5	1,5
	110V	0,2	0,2	0,2	0,1	0,1
	220V	0,05	0,05	0,05	0,05	0,05
Short-circuit-protection in Ampere Fuse Circuit-breaker G-characteristic	9L	6 16 6 16	6 6 6 6	6 16 16 16	10 10	10 10
Terminal screws Plug-in connector CAGE CLAMP® connection is a registered trademarkt of WAGO Kontakttechnik GmbH Germany		M 3,5 2,5mm²	M 3,5 2,5mm²	M 3,5 2,5mm²	M 3,5 6,3x0,8	M3,5 6,3x0,8
Conductor sizes in mm² finely stranded with end steeves		1,5	1,5	1,5	1,5	1,5
Mechanical life in million (operation cycles) max. switching frequency c/h 1000		10	20	10	6	10
Mechanical shock resistance IEC 68-2-27		Shock-amplitude > 15 Shock duration 20 ms				
Clearances and creepage distances IEC 947-1; 2.5.46.51		Overvoltage category III pollution grade 3				

Degree of protection to IEC/EN 60529	1. numerial protection of contact and foreign bodies	2. numerial protection of water
IP00	No protection	No protection
IP54	Protection deposits of dust	Protection splashing of water
IP65	Protection complete of dust	Protection hosed of water
IP66	Protection complete of dust	Protection hosed strong of water

Technical details may vary based on configuration or application! Technical data subject to change without notice!

Technical data

GESSMANN Industrial Controllers

1

Attach our switching device		**V8 V85 D8**	**VV8 VV85 D3 S3**	**V10 V25 S1**	**V14 S14**	**V3**	Dead man`s button signal button push button
Rated isolation voltage Ui in Volt		110	110	110	250	500	250
Rated operational voltage Ue in Volt		110	110	110	250	350	250
Rated operational voltage in Ampere	Ie AC 12	2	2	2	6	16	6
	AC 15	0,5	0,5	0,5	2	4	2
DC 12	24 V	2	2	2	6	8	4
	48V	1	1	1	2	4	2
	110V	0,1	0,1	0,1	0,5	1	0,2
	220V				0,1	0,5	0,1
Contacts gold-coated	24V	5 mA	5 mA	5 mA	5 mA	5 mA	5 mA
DC 13	24V	1,5	1,5	1,5	1	1	3
	48V	0,5	0,5	0,5	0,5	0,5	1,5
	110V	0,05	0,05	0,05	0,2	0,2	0,1
	220V				0,05	0,05	0,05
Short-circuit-protection in Ampere Fuse Circuit-breaker G-characteristic	9L	4 4	4 4	4 4	6 6	16 16	6 6
Terminal screws Plug-in connector CAGE CLAMP® connection is a registered trademarkt of WAGO Kontakttechnik GmbH Germany			Solder terminal		M4 1,5mm²	M 3,5 6,3x0,8	6,3 x 0,8
Conductor sizes in mm² finely stranded with end steeves		0,5	0,5	0,5	1	1,5	1,5
Mechanical life in million (operation cycles) max. switching frequency c/h 1000		8	12	8	6	6	10
Mechanical shock resistance IEC 68-2-27		Shock-amplitude > 15	Shock duration 20 ms				
Clearances and creepage distances IEC 947-1; 2.5.46.51		Overvoltage category III pollution grade 3					
Degree of protection to IEC/EN 60529		1. numerial protection of cont-act and foreign bodies		2. numerial protection of water		zweite Kennziffer Wasserschutz	
		No protection		No protection		kein Schutz	
		Protection deposits of dust		Protection splashing of water		Schutz gegen Spritzwasser	
		Protection complete of dust		Protection hosed of water		Schutz gegen Strahlwasser	
		Protection complete of dust		Protection hosed strong of water		Schutz gegen starkes Strahl-wasser	

Technical details may vary based on configuration or application! Technical data subject to change without notice!

V2015/1 10.02.2015

Potentiometer
with attach to our switching device

GESSMANN Industrial Controllers

with centre tap life

for mounting on	Typ	Capacity (W)	Imax wiper (mA)	Typ	Expansion	2x0,5 kOhm	2x1 kOhm	2x2 kOhm	2x5 kOhm	2x10 kOhm	Hall 0,5...2,5...4,5V / 4,5...2,5...0,5V	Part No.	Addition for Part No.	Comment
						1	**2**	**3**	**4**	**5**				
V6 / VV6 D64 / DD64 V5 / VV5 V3 S2 / SS2 S6 N6 P7 P8	T 1420	1,5	10	P44	☐	x	x	x	x	x		524004400	☐	
	T 132	2,5	10	P05	☐	x	x	x	x	x		524000500	☐	
	T 132 Öl	2,5	10	P06	☐	x	x		x	x		524000600	☐	
	T 178	1,5	10	P07	☐		x	x	x			524000700	☐	characteristic progressive
	T 238	1	10	P08	☐	x	x	x	x	x*1		524000800	☐	*1 R= 2x 6,5 kOhm
	T 133	60	85	P10	☐	x						524001000	☐	
	T 396	0,5	1	P13	☐	x	x	x	x	x		524001300	☐	
	T 1350 Ex	0,5	1	P14	☐	x	x	x	x	x		524001400	☐	
	T 1360			P43							x	5240043009		
V8 / VV8 D8 P10 P11 P12	T 239	1	10	P17	☐		x	x	x	x		524001700	☐	
	T 301	0,5	1	P18	☐		x	x	x	x		524001800	☐	
	T 426	0,5	1	P19	☐				x	x		524001900	☐	with direction lines
	T 432	0,5	1	P20	☐				x			524002000	☐	
	T 246	0,5	1	P21	☐	x	x		x	x		524002100	☐	
	T 362	0,5	1	P22	☐		x	x	x			524002200	☐	
	T 1003			P42							x	5240042009		
	T 1360			P43							x	5240043009		
V10 S1 Palm handle	T 321	1	10	P24	☐		x					524002400	☐	
	T 320	0,5	1	P25	☐		x		x			524002500	☐	
	T 430	0,5	1	P27	☐				x			524002700	☐	with direction lines
	T 375	0,5	1	P37	☐		x		x			524003700	☐	
	T 997			P41							x	5240041009		
V11	T 316	1	10	P31	☐				x*2			524003100	☐	*2 R= 2x 4 kOhm
	T 365	0,5	1	P32	☐				x	x		524003200	☐	

without centre tap life

for mounting on	Typ	Capacity (W)	Imax wiper (mA)	Typ	Expansion	0,5 kOhm	1 kOhm	2 kOhm	5 kOhm	10 kOhm	Part No.	Addition for Part No.	Commend
						1	**2**	**3**	**4**	**5**			
V6 / VV6 D64 / DD64 V5 / VV5 V3 S2 / SS2 S6 N6 P7 / P8	T1491	1,5	10	P46	☐	x	x	x	x	x	524004600	☐	
	T 131	2,5	10	P03	☐	x	x	x	x	x	524000300	☐	
	T 131 Öl	2,5	10	P04	☐		x		x	x	524000400	☐	
	T 134	60	85	P11	☐				x		524001100	☐	
	T 374	0,5	1	P12	☐	x	x	x	x	x	524001200	☐	
V8 / VV8 /D8 P10/P11/P12	T 244	0,5	1	P23	☐			x	x	x	524002300	☐	
V10 / S1 Palm grip	T 337	0,5	1	P26	☐		x	x	x	x	524002600	☐	
GE1/GE2	PW 70	5	30	P45	☐	x	x		x		524004500	☐	

2

Technical details may vary based on configuration or application! Technical data subject to change without notice!

Hall-Potentiometer
HG 1

The Hall-Potentiometer HG1 is distinguished by its precision and longevity.

Technical data

Mechanical life	10 million operating cycles
Operation temperature	-40°C til +60°C
Degree of protection	IP 67

2

Example

	HG1	- 60	- E1031	- X

Basic unit

HG1 Hall-Potentiometer HG1

Operating distance

0-359° possible

example 60° => 60

Interface

E1031	1	0,5...2,5...4,5V redundant counter-rotating Ub=4,75-5,25VDC
	2	0,5...2,5...4,5V redundant co-rotating right-handed Ub=4,75-5,25VDC
	3	0,5...2,5...4,5V redundant co-rotating left-handed Ub=4,75-5,25VDC
E1091	2	0,5...2,5...4,5V right-handed Ub=9-32VDC
	3	0,5...2,5...4,5V left-handed Ub=9-32VDC
E2011	2	0...10...20mA right-handed
	3	0...10...20mA left-handed
E2091	2	4...12...20mA right-handed
	3	4...12...20mA left-handed

Special model

X Special / customer-specific

Technical details may vary based on configuration or application! Technical data subject to change without notice!

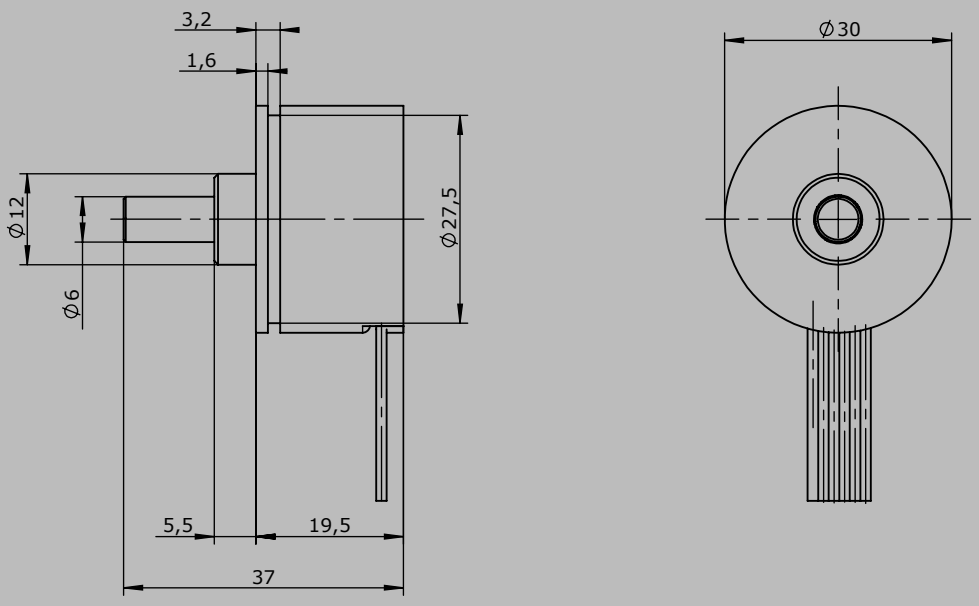

Technical details may vary based on configuration or application! Technical data subject to change without notice!

Opto-electronic encoder
Output digital OEC 2
with attach to our switching device

GESSMANN Industrial Controllers

Opto-electronical encoder OEC 2 with digital output gray-/binär-cdode

Power supply	18-30VDC				
Rotation angle	max. +/-150° (by 9 Bit 300°)				
Digital output	8 Bit Gray-Code T359	Output characteristic linear	OEC 2-1-1	C01	410g
	8 Bit Binär-Code T359	Output characteristic linear	OEC 2-2-1	C02	410g
	6 Bit Gray-Code T359	Output characteristic linear	OEC 2-3-1	C031	410g
	6 Bit Gray-Code T359	Output characteristic quadratic	OEC 2-3-2	C032	410g
	6 Bit Binär-Code T359	Output characteristic linear	OEC 2-4-1	C041	410g
	6 Bit Binär-Code T359	Output characteristic quadratic	OEC 2-4-2	C042	410g
	9 Bit Gray-Code T384	Output characteristic linear one side clockwise	OEC 2-5-4	C054	410g
	9 Bit Gray-Code T384	Output characteristic linear one side anticlockwise	OEC 2-5-5	C055	410g
	9 Bit Binär-Code T384	Output characteristic linear one side clockwise	OEC 2-6-4	C064	410g
	9 Bit Binär-Code T384	Output characteristic linear one side anticlockwise	OEC 2-6-5	C065	410g

6 Bit-type T359

PIN connection		Colour-code
1	not connected	-
2	D4	brown
3	D3	green
4	D2	yellow
5	D1	grey
6	not connected	-
7	not connected	-
8	Housing 0 V	black
9	Input 18-30 V DC	red
10	not connected	-
11	not connected	-
12	Direction-signal left	violett
13	Direction-signal grey	grey-pink
14	D6	red-blue
15	D5	white-green
-	Cable screen	brown-green

8-Bit-type T359

PIN connection		Colour-code
1	not connected	-
2	D6	brown
3	D5	green
4	D4	yellow
5	D3	grey
6	D2	pink
7	D1	blue
8	Housing 0 V	black
9	Input 18-30 V DC	red
10	not connected	-
11	not connected	-
12	Direction-signal left	violett
13	Direction-signal right	grey-pink
14	D8	red-blue
15	D7	white-green
-	Cable screen	brown-green

9 Bit-type T384

PIN connection		Colour-code
1	not connected	-
2	D6	brown
3	D5	green
4	D4	yellow
5	D3	grey
6	D2	pink
7	D1	blue
8	Housing 0 V	black
9	Input 18-30 V DC	red
10	not connected	-
11	not connected	-
12	Direction-signal left	violett
13	D9	grey-pink
14	D8	red-blue
15	D7	white-green
-	Cable screen	brown-green

6 Bit-type T359 **8 Bit-type T359**

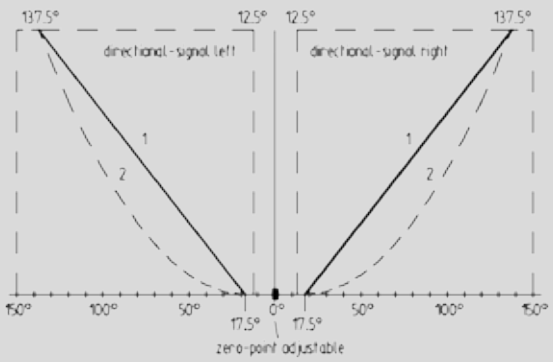

9 Bit-type T384

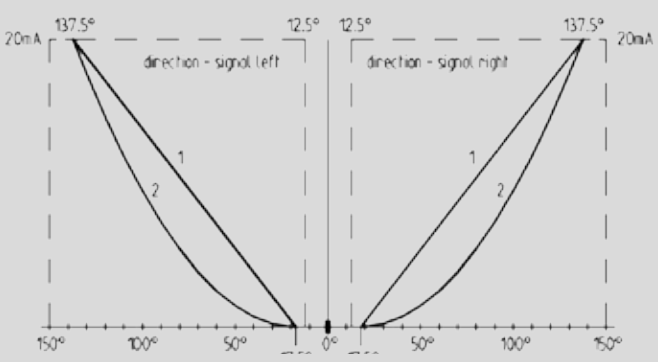

Technical details may vary based on configuration or application! Technical data subject to change without notice!

V2015/1 10.02.2015

Opto-electronic encoder digital OEC 2 with attach to our switching device

GESSMANN Industrial Controllers

Opto-electronical encoder OEC 2 with voltage output					
Power supply	18-30VDC				
Scanning	6 Bit Gray-Code				
Rotation angle	max. +/-150°				
Voltage output	10...0...10V T366	Output characteristic linear	OEC 2-3-1-1	C111	410g
	10...0...10V T366	Output characteristic quadratic	OEC 2-3-2-1	C112	410g
	-10...0...+10V T367	Output characteristic linear	OEC 2-3-1-2	C151	410g
	-10...0...+10V T367	Output characteristic quadratic	OEC 2-3-2-2	C152	410g

Voltage output

PIN connection		Colour-code
1	not connected	-
2	not connected	-
3	not connected	-
4	not connected	-
5	not connected	-
6	not connected	-
7	not connected	-
8	Housing 0 V	blue
9	Input 18-30 V DC	brown
10	not connected	-
11	Voltage output	green
12	Direction signal left	yellow
13	Direction signal right	grey
14	not connected	-
15	not connected	-
-	Cable screen	white

6 Bit-type T366

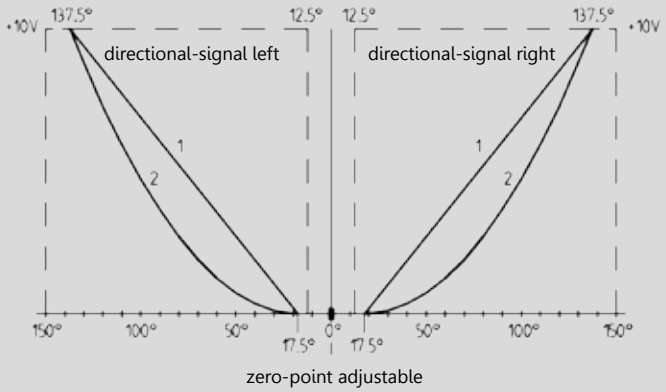

6 Bit-type T367

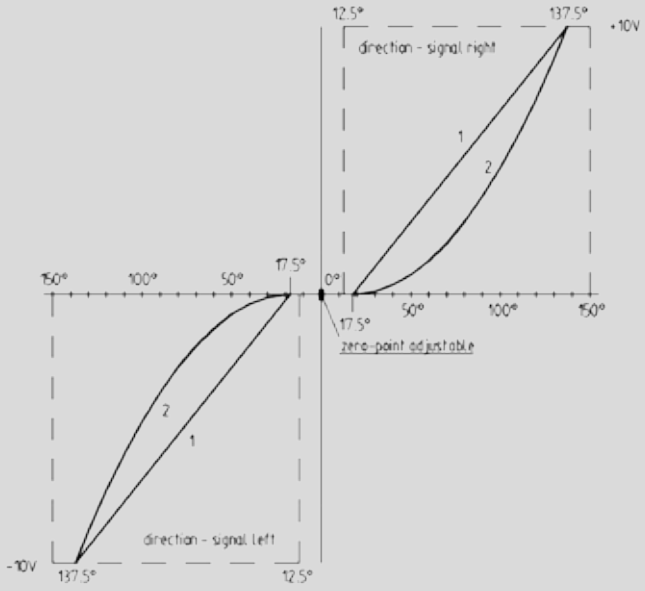

Technical details may vary based on configuration or application! Technical data subject to change without notice!

Opto-electronic encoder
Output digital OEC 2
with attach to our switching device

GESSMANN Industrial Controllers

Opto-electronical encoder OEC 2 with current output

Power supply	18-30VDC				
Scanning	6 Bit Gray-Code				
Rotation angle	max. +/-150°				
Output current	20...4...20 mA T368	Output characteristic linear	OEC 2-3-1-5	C191	410g
	20...4...20 mA T368	Output characteristic quadratic	OEC 2-3-2-5	C192	410g
	20...0...20 mA T368	Output characteristic linear	OEC 2-3-1-8	C201	410g
	20...0...20 mA T368	Output characteristic quadratic	OEC 2-3-2-8	C202	410g
	-20...0...+20 mA T369	Output characteristic linear	OEC 2-3-1-6	C231	410g
	-20...0...+20 mA T369	Output characteristic quadratic	OEC 2-3-2-6	C232	410g

6 Bit-Type T368

PIN connection		Colour-code
1	not connected	-
2	not connected	-
3	not connected	-
4	not connected	-
5	not connected	-
6	not connected	-
7	not connected	-
8	Housing 0 V	blue
9	Input 18-30 V DC	brown
10	not connected	-
11	Current output	green
12	Direction signal left	yellow
13	Direction signal right	grey
14	not connected	-
15	not connected	-
-	Cable screen	white

6 Bit-Type T369

PIN connection		Colour-code
1	not connected	-
2	not connected	-
3	not connected	-
4	not connected	-
5	not connected	-
6	not connected	-
7	not connected	-
8	Housing 0 V	blue
9	Input 18-30 V DC	brown
10	not connected	-
11	Current output	green
12	Direction signal left	yellow
13	Direction signal right	grey
14	not connected	-
15	not connected	-
-	Cable screen	white

6 Bit-type T368

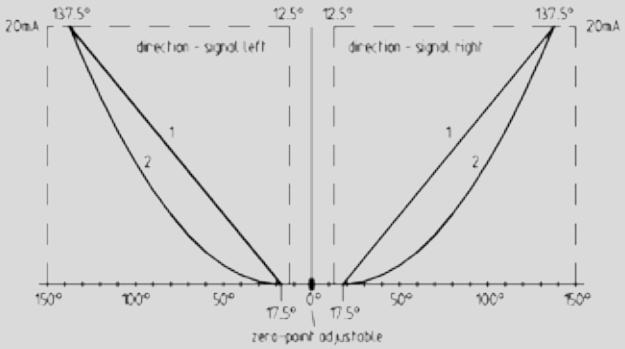

6 Bit-type T369

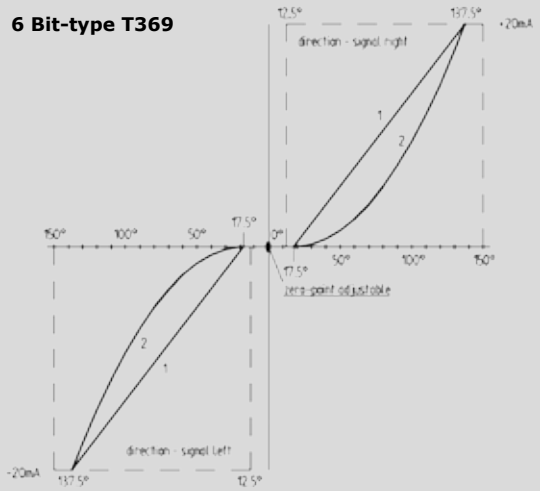

Attachment

Plug with cable 14x0,25 qmm, 2000 mm long, cable head open (for OEC 2 with digital outputs)	5300000495
Plug with cable 7x0,25 qmm, 2000 mm long, cable head open (for OEC 2 with analog outputs)	5300000496

The OEC 2 is able for mounting on V6,VV6/D64,DD64/V11/S2,SS2/S6/N6. For mounting a potentiometer mounting option (P) of the respective controller is required!

Technical details may vary based on configuration or application! Technical data subject to change without notice!

V2015/1 10.02.2015

Opto-electronic encoder
OEC 4
with interface Profibus DP

GESSMANN Industrial Controllers

Opto-elecetronic encoder				
Power supply	18-30VDC			
Scanning	6, 8 or 9 Bit Gray-Code			
Rotation angle	max. +/-150°			
Interface	Profibus, DP, address 0-99 adjustable above selector switch			
Voltage output	8 Bit Gray-Code T496 linear	OEC 4-1-1-2	C27	820g
	8 Bit Binary-Code T496 linear	OEC 4-2-1-2	C28	820g
	6 Bit Gray-Code T496 linear	OEC 4-3-1-2	C291	820g
	6 Bit Gray-Code T496 quadratic	OEC 4-3-2-2	C292	820g
	6 Bit Binary-Code T496 linear	OEC 4-4-1-2	C301	820g
	6 Bit Binary-Code T496 quadratic	OEC 4-4-2-2	C302	820g
	9 Bit Gray-Code T497 linear one sided right turn	OEC 4-5-4-2	C314	820g
	9 Bit Gray-Code T497 linear on sided left turn	OEC 4-5-5-2	C315	820g
	9 Bit Binary-Code T497 linear on sided right turn	OEC 4-6-4-2	C324	820g
	9 Bit Binary-Code T497 linear on sided left turn	OEC 4-6-5-2	C325	820g

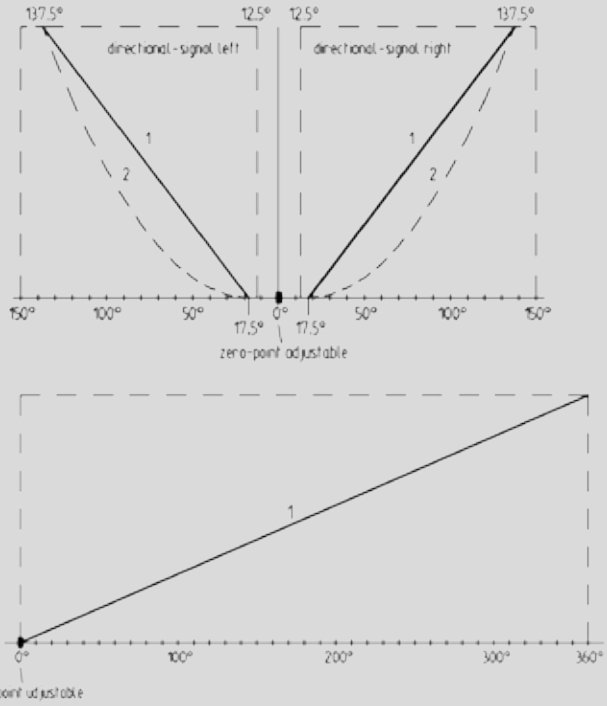

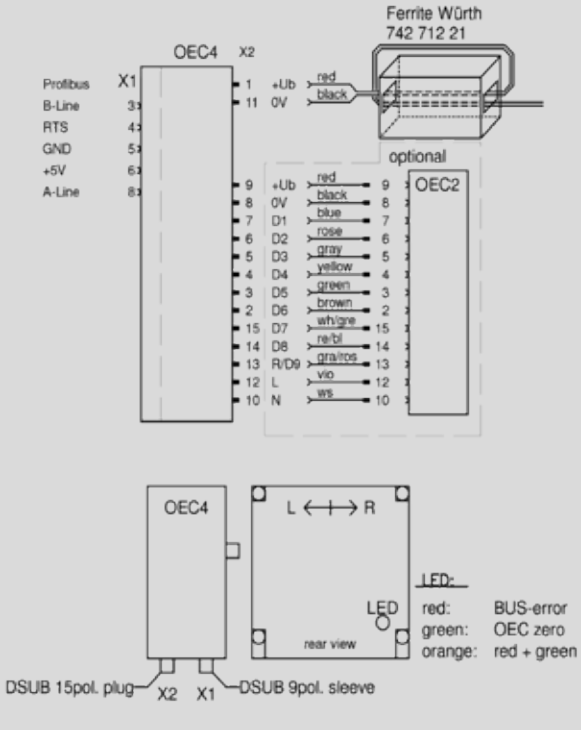

Attachment

Plug (Profibus) straight

Plug (Profibus) 90° angled

Plug with cable 2x0,25 qmm, 2000 mm long, cable head open (cable for current supply OEC 4 single application)

Plug with 2 cable (14x0,25 qmm, 2x0,25 qmm), cable head open (Connection cable OEC 4 / OEC 2 for OEC 2 incl. cable for current supply)

The OEC 4 is able for mounting on V6,VV6/D64,DD64/V11/S2,SS2/S6/N6. For mountig a potentiometer mounting option (P) of the respective controller is required! For a controller with one axis is required 1 piece of OEC 4, for a controller with 2 axis are required 1 piece of OEC 4 and 1 piece of OEC 2.

Technical details may vary based on configuration or application! Technical data subject to change without notice!

Electronic control unit ES/43

The electronic control unit ES/43 serves for control of proportional valves without position control. There is a version for 4 proportional valve solenoids (ES / 43-10) and a version for 2 Proportional valve solenoids (ES / 43-11) available.

Example

Features:

- Stabailized voltage
- Chopper output stage with adjustable frequency
- Ramp time setting ON/OFF delay
- Creep speed circuit adjustable
- Solenoid current setting separate for minimum current and maximum current
- Output current controlled independently of temperature and solenoid
- Power output short-circuit-proof with overload protection
- Voltage input protected against polarity reversal
- Mechanical selection of direction by means of contacts
- LED operating voltage and working display
- Microprocessor technology therefore especially adaptable

2

Technical data:

- Supply voltage		10...	32 V DC
- Residual ripple		20%	
- Control voltage range	Ue	0...	5V
- Control current	Ie	< 1 mA	
- Dither frequency	f	25...	250 Hz
- Proportional valve S 1-4	I min.	0...	1 A
Output	I max. = I min ...		2 A at 12 Volt
Output	I max. = I min ...		1 A at 24 Volt
- Ramp time setting	t on	0,2...	25 sec
	t off	0,2...	25 sec
- Creep speed	variable reduction		25...75%
- Operating temperature	-20°C til +60°C		
- Storage temperature	-40°C til +80°C		

Electronic control unit for 4 proportional valves solenoid ES/43-10

Electronic control unit for 2 proportional valves solenoid ES/43-11

Technical details may vary based on configuration or application! Technical data subject to change without notice!

V2015/1 10.02.2015

ES / 43-10
4 Proportional valves-solenoid

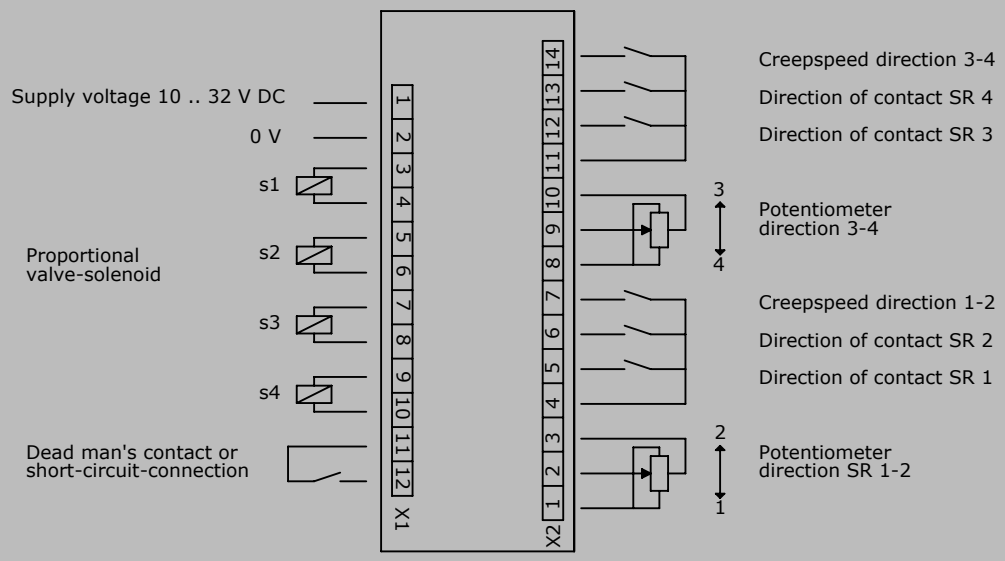

ES / 43-11
2 Proportional valves-solenoid

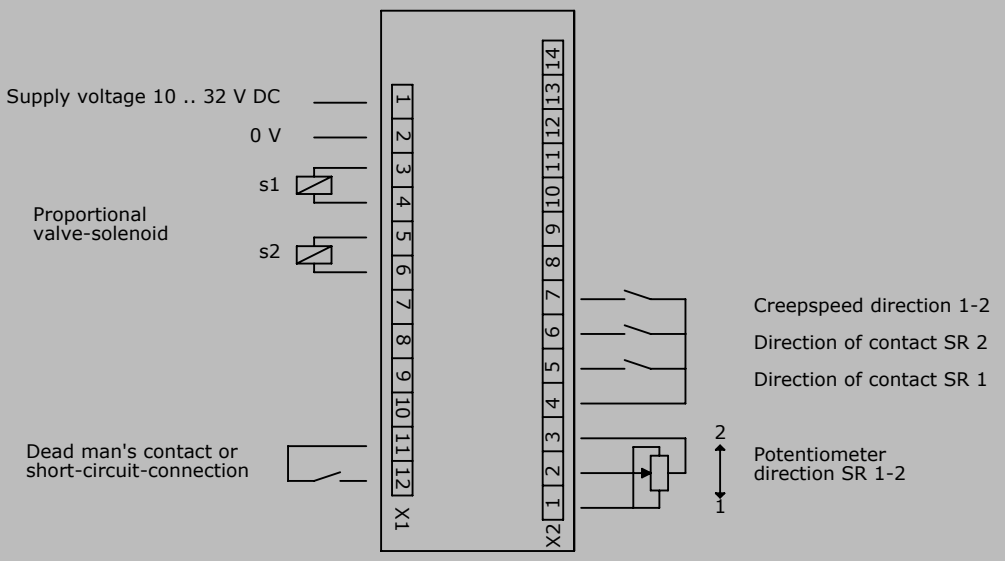

2

Technical details may vary based on configuration or application! Technical data subject to change without notice!

Palm grip MATRIX
with attach to our switching device

GESSMANN Industrial Controllers

Controllers	Palm grip																
	B1	B2	B3	B4	B5	B6	B7 / B8	B9	B10	B14 / B15	B20	B22	B23	B24	B25	B28	B29
V6 / VV6	X	X	X *1	X	X	X			X	X		X		X		X	
V11	X			X	X	X			X	X		X		X		X	
V8 / VV8	X	X	X	X	X	X	X	X	X	X	X	X	X	X	X	X	X
V85 / VV85	X	X	X	X	X	X	X	X	X	X	X	X	X	X	X	X	X
V25	X	X	X	X	X	X	X	X	X	X	X	X	X	X	X	X	X
V24	X	X	X	X	X	X	X	X	X	X	X	X	X	X	X	X	X
V14				X	X	X						X					
D64 / DD64									X								
D8									X								
D3									X								
S2 / SS2	X*2.3			X*3	X	X*3			X*3			X*3		X*3		X*3	
S22 / SS22	X*2.3			X*3	X	X*3			X*3								
S26	X*3			X*3	X	X*3			X*3			X*3		X*3		X*3	
S6	X				X												

*1 deflection limited to 28°
*2 only B1-T possible
*3 only possible with Type A

Technical details may vary based on configuration or application! Technical data subject to change without notice!

V2015/1 10.02.2015

Hall-push button
HD

The hall-push button impressed by its durability and versatility. It is available in three basic versions. By combining different lighting options, colors and symbols, it is possible to customize.

Technical data

Mechanical life	10 million operating cycles
Operation temperature	-40°C til +60°C
Degree of protection	IP 67

Example

HD1	- 2	- 1	- 1	- 1	- E02	- X

Basic unit

HD1	Hall-push button digital with bellow
HD2	Hall-push button digital without bellow
HD3	Hall-push button digital, flat mounting without bellow

Illumination

1	Unlighted
2	Night light white, U_LED=4,5-5,5V
3	Functional lighting 2-colored red-green (single shiftable) U_LED=4,5-5,5V
4	Functional lighting 2-colored red-white (single shiftable) U_LED=4,5-5,5V
5	Functional lighting 2-colored green-white (single shiftable) U_LED=4,5-5,5V

Colour actuator

1	Transparent
2	Black*

**Only possible by unlighted push button!*

Icon platelets

1	White transparent*
2	White
3	Yellow
4	Green
5	Blue
6	Black
7	Red
8	Orange

**Print on back side possible, thereby the print is resistant to abrasion!*

Technical details may vary based on configuration or application! Technical data subject to change without notice!

Hall-push button
HD

GESSMANN Industrial Controllers

HD1	- 2	- 1	- 1	- 1	- E01	- X

Symbol

1	Without
2	Buzzer
3	Arrow up
4	Arrow down
5	Turtle
6	Rabbit
X	Custom-made

Interface

E0101	Push button signal not redundant Ub=4,5-5,5VDC
E0111	Push button signal redundant Ub=4,5-5,5VDC
E0201	Push button signal not redundant Ub=4-32VDC
E0211	Push button signal redundant Ub=4-32VDC

1	Possible for optocoupler and SPS
2	Power switch (Open Drain) I_Hallmax=25mA

Special model

X	Special / customer-specific

2

Edition:
HD1

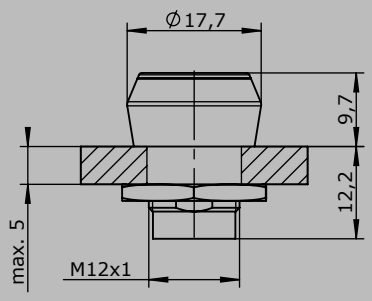

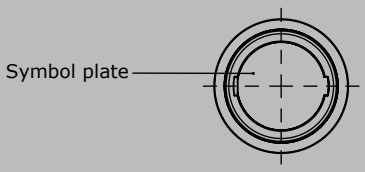

Hole pattern

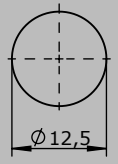

Edition:
HD2

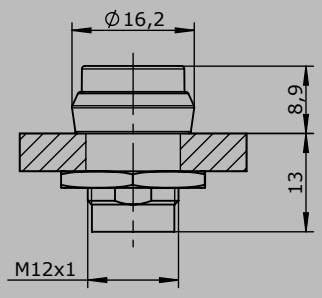

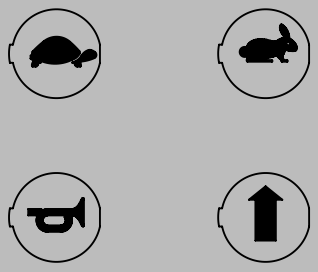

Edition:
HD3

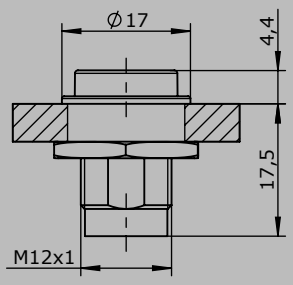

Hole pattern

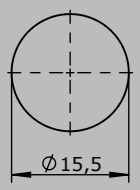

2

Technical details may vary based on configuration or application! Technical data subject to change without notice!

Palm grip
B1

GESSMANN Industrial Controllers

The palm grip B1 has different equipment options for many requirements.
It is compatible with our multi-axis controller or mounted on hydraulic drives.
The palm grip has a highly flexible cable (4 respectively 8x0,25 qmm, 450 mm long).
The mounting piece can be supplied with a tapped hole M10 (standard) or M8.

Technical data

Operating temperature	-40°C til +60°C
Degree of protection	IP 54
Contact complement	3A 24VDC13 (*¹ 1,5A 24VDC13)

2

Example

		B1	- 2D	W	- X
Basic unit					
B1	Palm grip				
Digital actuating element					
D	Push button top				
D	Push button side *¹				
W	Rocker switch top T-0-T				
W	Rocker switch top R-0-T				
W	Rocker switch top R-0-R				
T	Push button top with mechanical operation				
	(only possible with multi-axis controller or single-axis controller!)				
K	Lever switch				
KT	Lever switch mechanical operation				
	(only possible with multi-axis controller or single-axis controller!)				
Special model					
X	Special / customer-specific				

Edition:
Push button installed Pos. 1,2,3,4

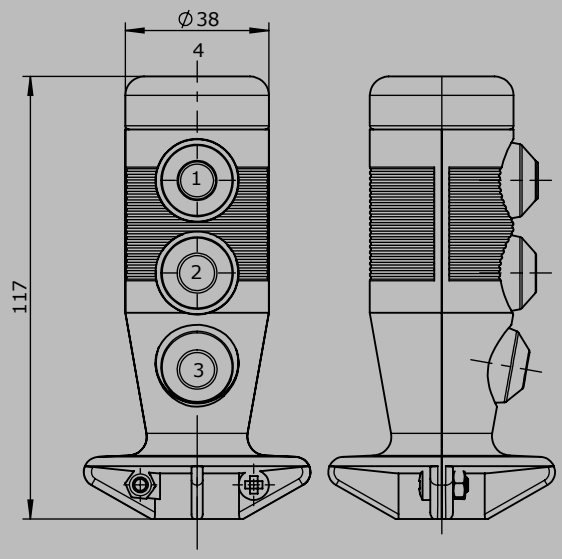

Edition:
Rocker switch installed Pos. 4
Push button installed Pos. 2,3

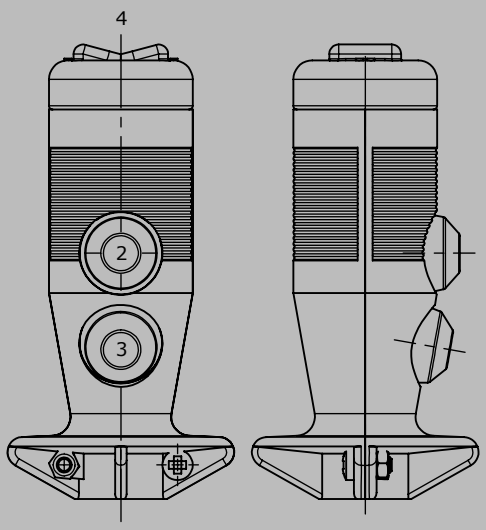

Edition:
Lever switch installed side

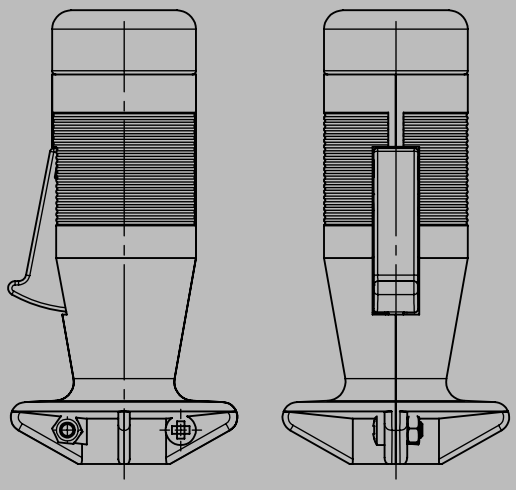

Technical details may vary based on configuration or application! Technical data subject to change without notice!

Palm grip
B2

The palm grip B2 has different equipment options for many requirements.
It is compatible with our multi-axis controller or mounted on hydraulic drives.
The palm grip has a highly flexible cable (8x0,25 qmm, 450 mm long).
He can be tilted in any direction by 20 degrees and can lock in this position.
The mounting piece can be supplied with a tapped hole M10 (standard) or M8.

Technical data

Operating temperature	-40°C til +60°C
Degree of protection	IP 54
Contact complement	1,5A 24VDC13 (*¹ 0,1A 24VDC13)

2

Example

	B2	- 2D	PA15	- X
Basic unit				
B2 Palm grip				
Digital actuating element				
D Push button KDA/70				
D Push button KDA21 *¹				
Colour: red, black, yellow, green, blue, white, orange				
A15 2 Push button Pos. 9+10 interlocked				
Analog actuating element				
PA15 Push button analog Pos. 9+10				
2 potentiometer T301 2x5 kOhm with direction contacts				
Special model				
X Special / customer-specific				

Technical details may vary based on configuration or application! Technical data subject to change without notice!

V2015/1 10.02.2015

B2

Edition:
Pusher installed Pos. 1,2

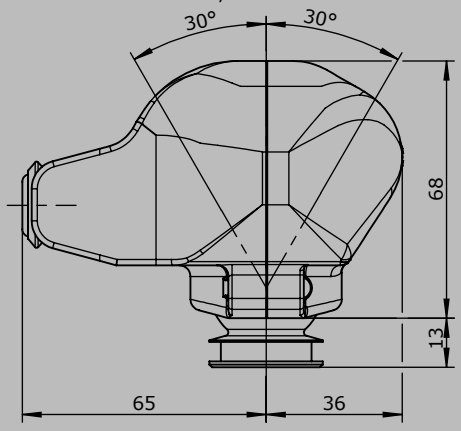

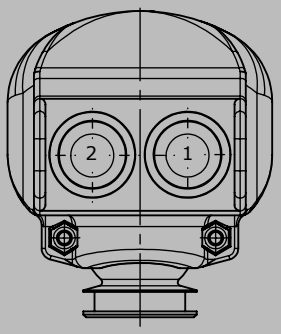

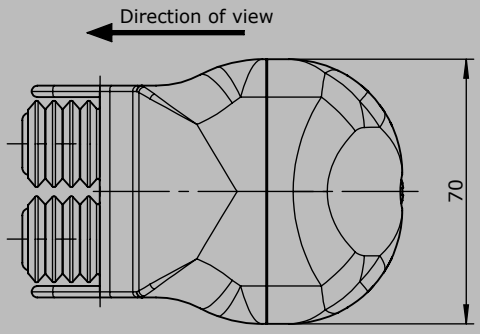

Edition:
Push button KDA / 70
installed Pos. 1,2,3,4

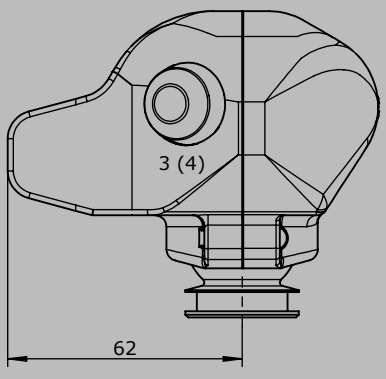

Edition:
Push button KDA 21
installed 1,2,3,4

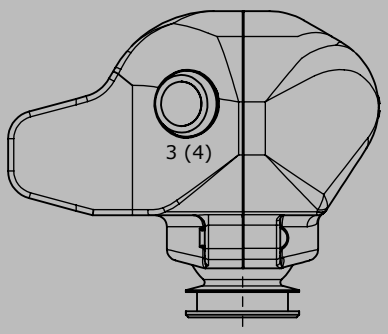

Technical details may vary based on configuration or application! Technical data subject to change without notice!

Palm grip
B3

GESSMANN Industrial Controllers

The palm grip B3 has different equipment options for many requirements.
It is compatible with our multi-axis controller or mounted on hydraulic drives.
The palm grip has a highly flexible single wire (0,1 qmm, 450 mm long).
The mounting piece can be supplied with a tapped hole 12 mm (standard) or 10 mm.

Technical data

Operating temperature	-40°C til +60°C
Degree of protection	IP 65
Contact complement	1,5A 24VDC13 (*¹ 0,1A 24VDC13)

2

Example

		B3	- 2D	W	K	SE	PA11	PA13	- X
Basic unit									
B3L	Palm grip left								
B3R	Palm grip right								
Digital actuating element									
D	Push button								
	Colour: red, black, yellow, green, blue, grey								
D	Push button KDA21 *¹								
	Colour: red, black, yellow, green, blue, white, orange								
W	Rocker switch T-0-T								
W	Rocker switch 0-T								
W	Rocker switch R-0-T								
W	Rocker switch R-0-R								
W	Rocker switch 0-R								
W	Rocker switch R-R								
K	Lever switch								
SR	Sliding switch								
ST	Sliding switch								
ZD	Push button with 2 steps								
A12	Push button Pos. 11-12								
A11	Thumbwheel T-0-T								
A11	Thumbwheel R-0-R								
	L left, R right								
A13	Rotary grip T-0-T								
SE	Sensor button capacitive								
S	Sensor button capacitive without external control electronics								
	(consistent with V85/VV85 and V25 with interface E4xx+E5xx)								
V	Vibration								

Technical details may vary based on configuration or application! Technical data subject to change without notice!

V2015/1 10.02.2015

Palm grip
B3

GESSMANN Industrial Controllers

		B3L	- 2D	W	K	SE	PA11R	PA13	- X
Analog actuating element									
PA11	Thumbwheel								
	Potentiometer T375 2x5 kOhm with direction contacts								
H11	Thumbwheel								
	Hall-Potentiometer T997								
	Output 0,5...2,5...4,5V redundant opposite								
	L left, R right								
PA12	Push button analog Pos. 11+12								
	Potentiometer T375 2x5 kOhm with direction contacts								
H12	Push button analog Pos. 11+12								
	Hall-Potentiometer T997								
	Output 0,5...2,5...4,5V redundant opposite								
PA13	Rotary handle								
	Potentiometer T375 2x5kOhm with direction contacts								
H13	Rotary handle								
	Hall-Potentiometer T997								
	Output 0,5...2,5...4,5V redundant opposite								
Special model									
X	Special / customer-specific								

2

GESSMANN Industrial Controllers

B3

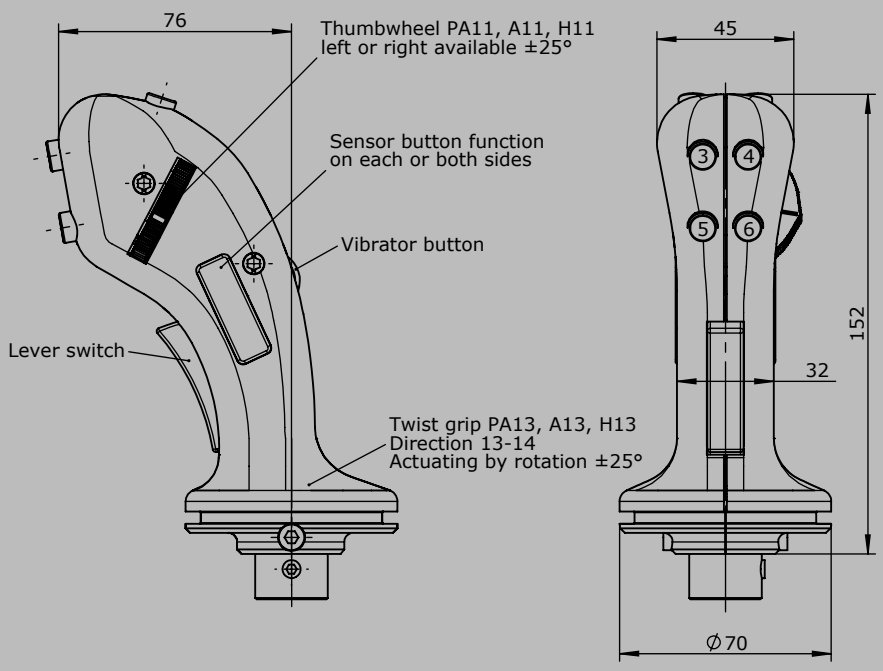

Edition:
Push button
installed Pos. 1,2

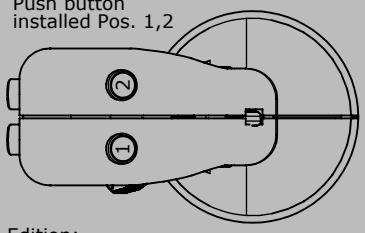

Edition:
Rocker switch
installed Pos. 7+8

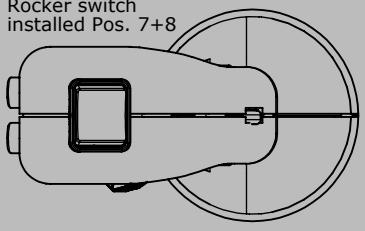

Edition:
Sliding switch
installed Pos. 13 + 14
Drive with potentiometer PA12 bzw.
Push button with 2 steps ZD
installed Pos. 11,12

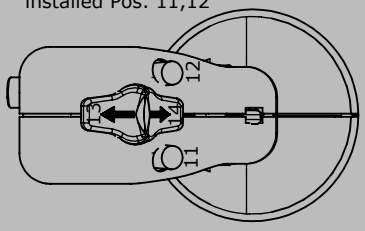

() = Installation right

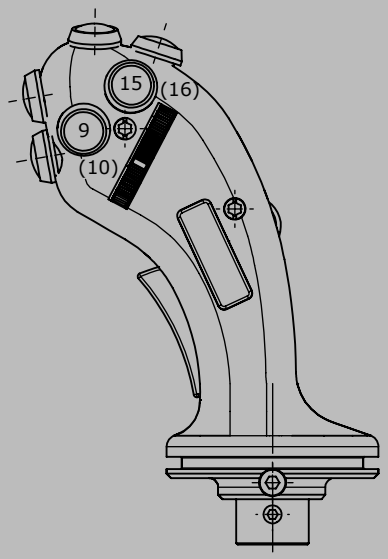

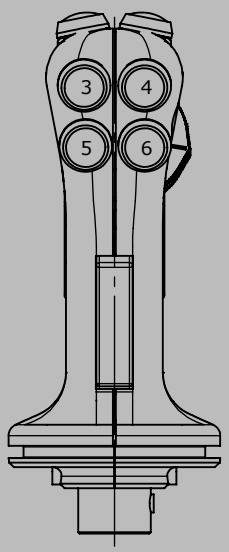

Edition:
Push button
installed Pos. 1,2,7,8

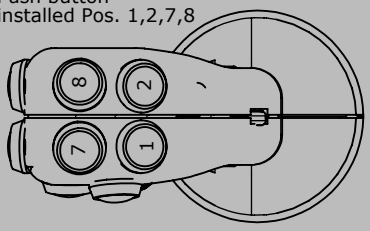

Edition:
Rocker switch
installed Pos. 7 + 8
Push button
installed Pos. 1,2

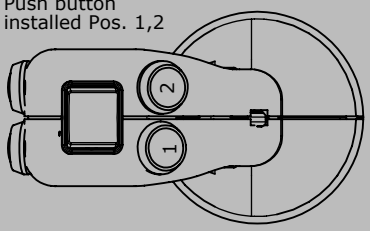

Technical details may vary based on configuration or application! Technical data subject to change without notice!

V2015/1 10.02.2015

Palm grip
B5

The palm grip B5 has different equipment options for many requirements.
It is compatible with our multi-axis controller or mounted on hydraulic drives.
The palm grip has a highly flexible single wire (4 respectively 8x0,25 qmm, 450 mm long).
The mounting piece can be supplied with a tapped hole M10 (standard) or M8.

Technical data

Operating temperature	-40°C til +60°C
Degree of protection	IP 54
Contact complement	3A 24VDC13 (*¹ 1,5A 24VDC13)

Example

		B5	- 2D	W	- X
Basic unit					
B5	Palm grip				
Digital actuating element					
D	Push button top				
D	Push button side *¹				
W	Rocker switch top T-0-T				
W	Rocker switch top R-0-T				
W	Rocker switch top R-0-R				
T	Push button top mechanical operation *(only possible in combination with multi-axis controller or single-axis controller!)*				
Special model					
X	Special / customer-specific				

2

2

Edition:
Push button installed Pos. 1,2,3

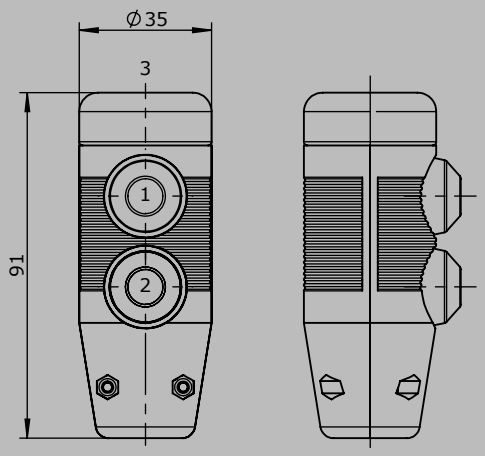

Edition:
Rocker switch installed Pos. 3
Push button installed Pos. 2

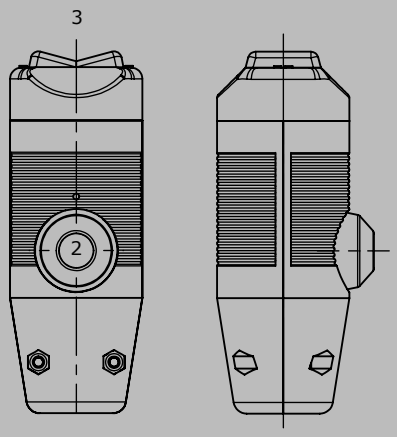

Technical details may vary based on configuration or application! Technical data subject to change without notice!

V2015/1 10.02.2015

Palm grip
B6

The palm grip B6 has different equipment options for many requirements.
It is compatible with our multi-axis controller or mounted on hydraulic drives.
The palm grip has a highly flexible cable (4 respectively 8x0,25 qmm, 450 mm long).
The mounting piece can be supplied with a tapped hole M10 (standard) or M8.

Technical data

Operating temperature	-40°C til +60°C
Degree of protection	IP 54
Contact complement	1,5A 24VDC13

Example

B6	- 2D	K	- X

Basic unit

B6 Palm grip

Digital actuating element

D Push button top
W Rocker switch top T-0-T
W Rocker switch top R-0-T
W Rocker switch top R-0-R
K* Lever switch
** Included with the delivery of palm grip B6!*

Special model

X Special / customer-specific

2

GESSMANN Industrial Controllers

2

B6

Edition:
Lever switch side
Rocker switch installed top

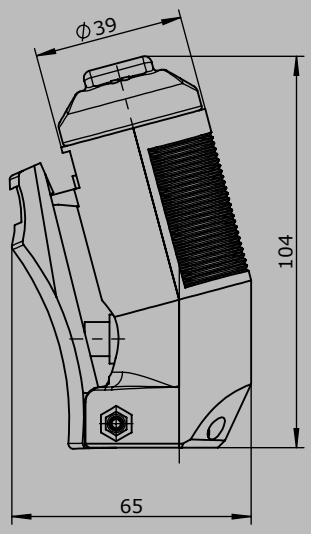

Edition:
Lever switch side
Push button top

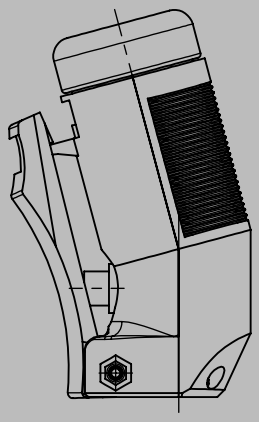

Technical details may vary based on configuration or application! Technical data subject to change without notice!

V2015/1 10.02.2015

Palm grip
B7 / B8

GESSMANN
Industrial Controllers

The palm grip B7 / B8 has different equipment options for many requirements.
It is compatible with our multi-axis controller or mounted on hydraulic drives.
The palm grip has a highly flexible single wire (0,1 qmm, 450 mm long).
The mounting piece for the drive rod can be supplied with a tapped hole 12 mm (standard) or 10 mm.

Example

Technical data

Operating temperature	-40°C til +60°C
Degree of protection	IP 65
Contact complement	1,5A 24VDC13 (*¹ 0,1A 24VDC13)

		B7	- 2D	W	K	SE	S9	PA13	- X
Basic unit									
B7	Palm grip left								
B8	Palm grip right								
Digitale actuating element									
D	Push button								
	Colour: red, black, yellow, green, white, orange								
D	Push button KDA21 *¹								
	Colour: red, black, yellow, green, blue, white, orange								
W	Rocker switch T-0-T								
W	Rocker switch 0-T								
W	Rocker switch R-0-T								
W	Rocker switch R-0-R								
W	Rocker switch 0-R								
W	Rocker switch R-R								
K	Lever switch								
A13	Rotary grip T-0-T								
SE	Sensor button capazitiv with external control electronics								
S	Sensor button capazitiv without external control electronics								
	(consistent with V85/VV85 and V25 with interface E4xx+E5xx)								
V	Vibration								
	Impulse 24VDC ED 100%								
Analog actuating element									
S9	Hall-thumb rocker *(see page 99)*								
	Output 0,5...2,5...4,5V redundant opposite								
V21	Hall-minijoystick *(see page 43)*								
	Output 0,5...2,5...4,5V redundant opposite								
P13	Rotary grip								
	Potentiometer T375 2x5 kOhm with direction contacts								
H13	Rotary grip								
	Hall-Potentiometer T997								
	Output 0,5...2,5...4,5V redundant opposite								
Special model									
X	Special / customer-specific								

Technical details may vary based on configuration or application! Technical data subject to change without notice!

GESSMANN Industrial Controllers

2

B7

Edition:
Push button installed Pos. 1 - 8

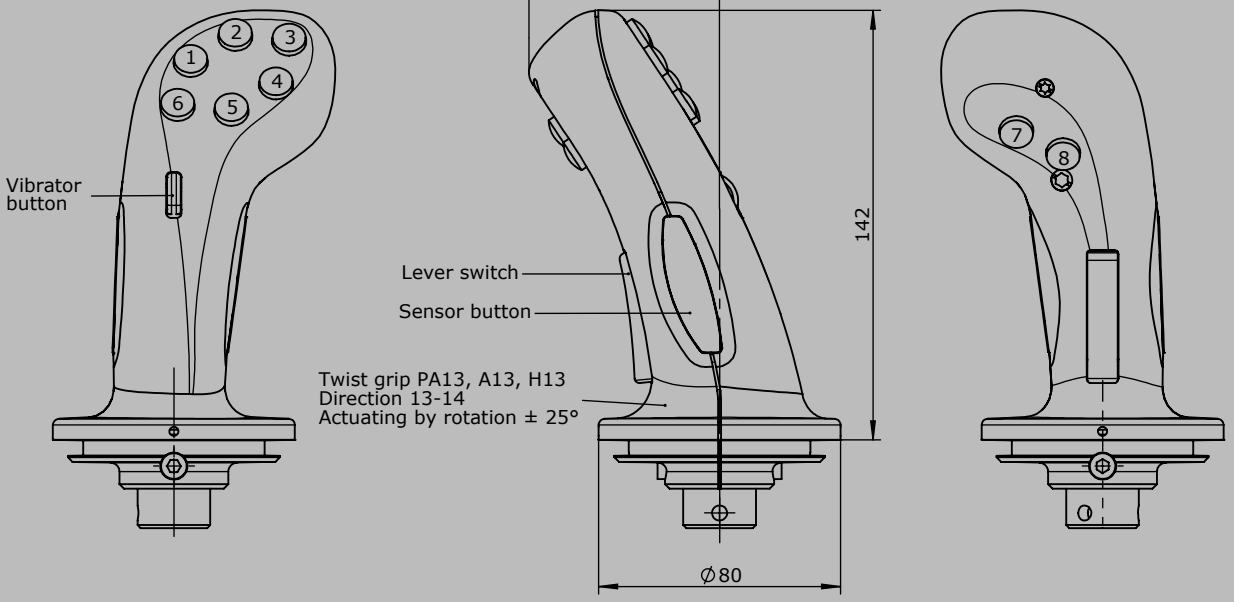

B8

Editon:
Push button installed Pos. 1 - 8

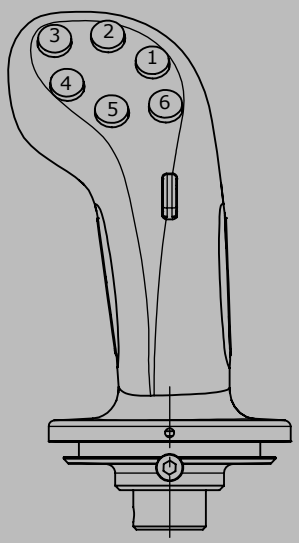

Edition:
Multi-axis controller V21
Push button installed Pos. 5,6,7,8

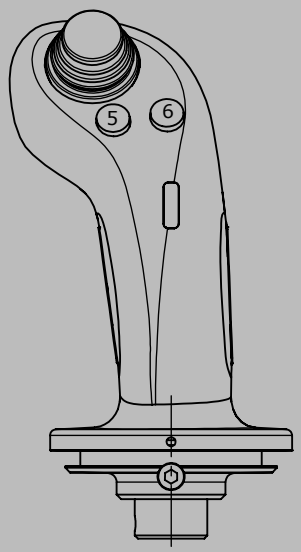

Edition :
Hall Rocker switch
Push button installed Pos. 1,5,6,8

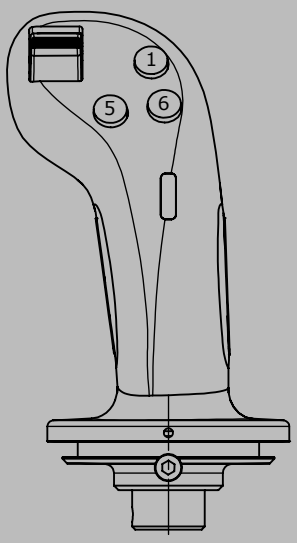

Technical details may vary based on configuration or application! Technical data subject to change without notice!

V2015/1 10.02.2015

Palm grip
B9

GESSMANN Industrial Controllers

The palm grip B9 has different equipment options for many requirements.
It is compatible with our multi-axis controller or mounted on hydraulic drives.
The palm grip has a highly flexible single wire (0,1 qmm, 450 mm long).
The mounting piece for the drive rod can be supplied with a tapped hole 12 mm (standard) or 10 mm.

Technical data

Operating temperature	-40°C til +60°C
Degree of protection	IP 65
Contact complement	1,5A 24VDC13

Example

		B9	- 2D	KT	A13	PA11	PA13	- X
Basic unit								
B9	Palm grip							
Digital actuating element								
D	Push button							
	Colour: red, black, yellow, green, blue, white							
KT	Cross switch T-0-T/T-0-T							
KR	Cross switch R-0-R/R-0-R							
A11	Rocker switch T-0-T Pos. 11+12							
A11	Rocker switch R-0-R Pos. 11+12							
A13	Rotary grip T-0-T							
Analog actuating element								
V21	Hall-minijoystick							
	Output 0,5...2,5...4,5V redundant opposite							
PA11	Rocker analog Pos. 11+12							
	Potentiometer T394 2x5 kOhm with direction contacts							
H11	Rocker analog Pos. 11+12							
	Hall-Potentiometer T997							
	Output 0,5...2,5...4,5V redundant opposite							
PA13	Rotary grip							
	Potentiometer T375 2x5 kOhm with direction contacts							
H13	Rotary grip							
	Hall-Potentiometer T997							
	Output 0,5...2,5...4,5V redundant opposite							
Special model								
X	Special / customer-specific							

2

Technical details may vary based on configuration or application! Technical data subject to change without notice!

GESSMANN Industrial Controllers

B9

Edition :
Push button installed Pos. 1 - 8
Cross switch tast

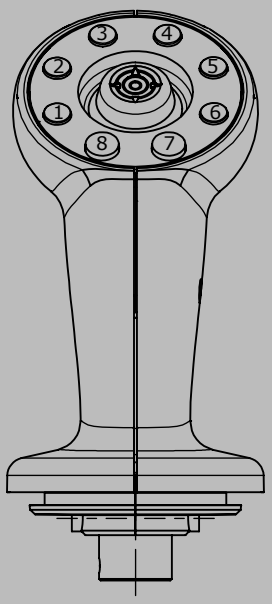

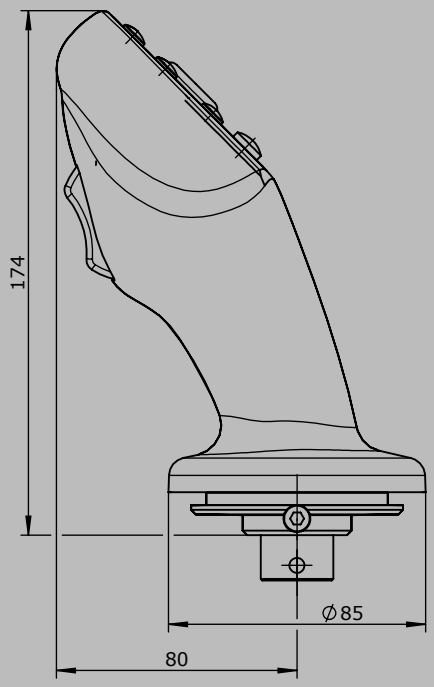

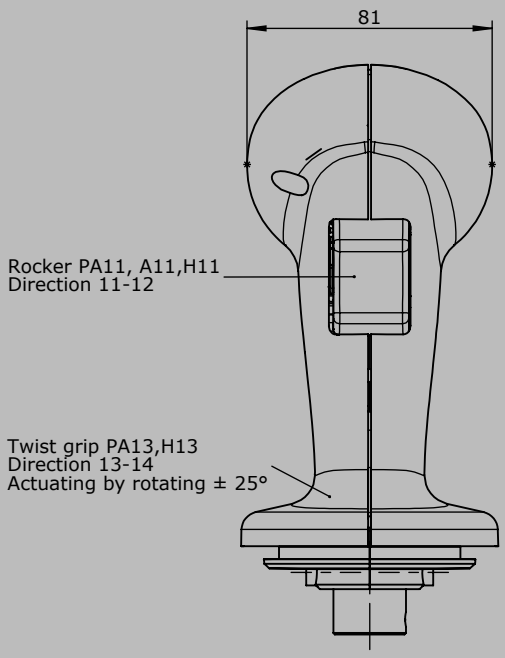

Edition :
Push button installed Pos. 1 - 8
Multi-axis controller V21

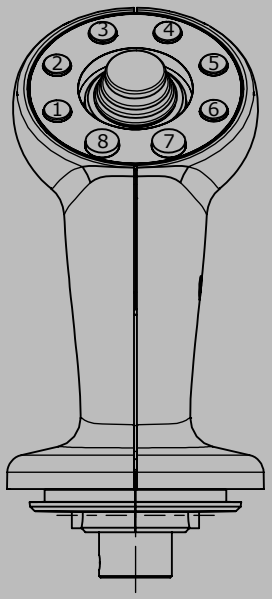

Technical details may vary based on configuration or application! Technical data subject to change without notice!

V2015/1 10.02.2015

Palm grip
B10

GESSMANN Industrial Controllers

The palm grip B10 has different equipment options for many requirements.
It is compatible with our double-handle controller or mounted on hydraulic drives.
The palm grip has a highly flexible single wire (0,1 qmm, 450 mm long).
The mounting piece for the drive rod can be supplied with a tapped hole 10 mm.

Technical data

Operating temperature	-40°C til +60°C
Degree of protection	IP 65
Contact complement	1,5A 24VDC13 (*¹ 0,1A 24VDC13)

Example

	B10AL	- 3D	W	V	- X
Basic unit					
B10L	Palm grip left				
B10R	Palm grip right				
B10AL	Palm grip left with growing part				
B10AR	Palm grip right with growing part				
Digital actuating element					
D	Push button KDA21 *¹				
	Colour: red, black, yellow, green, blue, white, orange				
W*	Rocker switch T-0-T				
W*	Rocker switch 0-T				
W*	Rocker switch R-0-T				
W*	Rocker switch R-0-R				
W*	Rocker switch 0-R				
W*	Rocker switch R-R				
**Only possible with version with attachment!*					
V	Vibration pulse 24VDC ED 100%				
Special model					
X	Special / customer-specific				

2

Technical details may vary based on configuration or application! Technical data subject to change without notice!

GESSMANN Industrial Controllers

2

B10

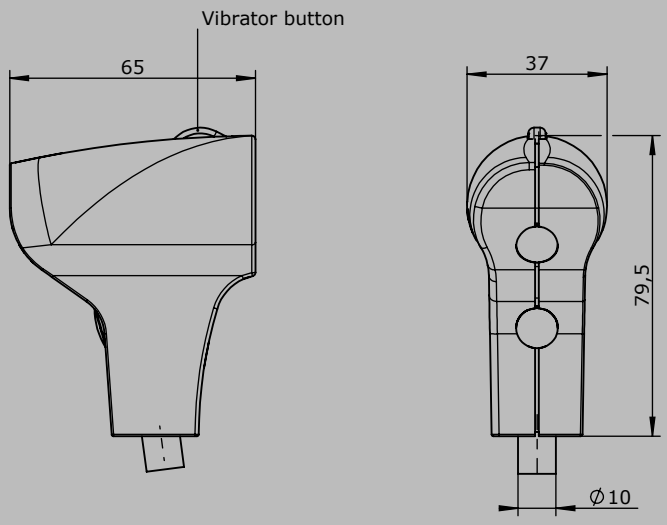

B10A

Edition installed left:
Push button installed Pos. 1,2,3
Rocker switch

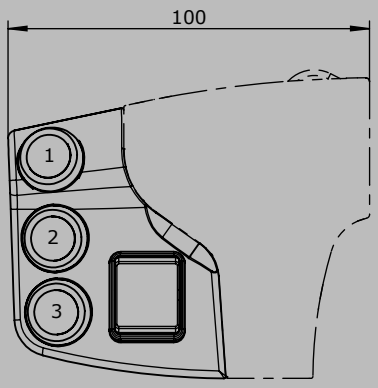

Edition installed right:
Push button installed Pos. 4,5,6
Rocker switch

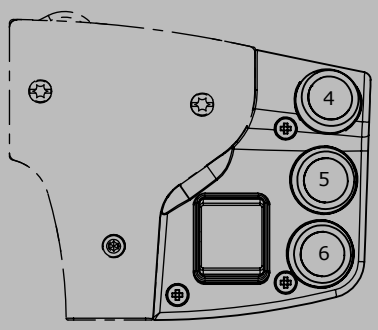

Technical details may vary based on configuration or application! Technical data subject to change without notice!

V2015/1 10.02.2015

Palm grip
B14 / B15

The palm grip B14/B15 has different equipment options for many requirements.
It is compatible with our multi-axis and single-axis controller or mounted on hydraulic drives.
The palm grip has a highly flexible single wire (0,1 qmm, 450 mm long).
The mounting piece for the drive rod can be supplied with a tapped hole 12 mm (standard) or 10 mm.

Example

Technical data

Operation temperature	-40°C til +60°C
Degree of protection	IP 65
Contact complement	0,1A 24VDC13

		B14	- 2D	- X
Basic unit				
B14	Palm grip left			
B15	Palm grip right			
Digital actuating element				
D	Push button KDA21 (0,1A 24VDC13)			
	Colour: red, black, yellow, green, blue, white, orange			
Special model				
X	Special / customer-specific			

2

GESSMANN Industrial Controllers

2

B14

Push button installed Pos. 1,2

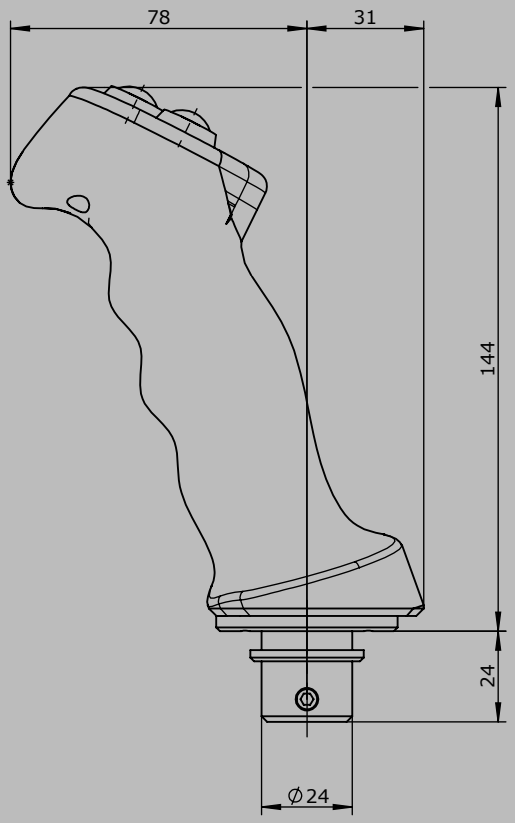

B15

Push button installed Pos. 1,2

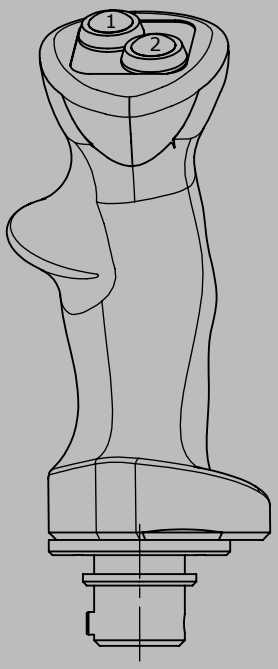

Technical details may vary based on configuration or application! Technical data subject to change without notice!

V2015/1 10.02.2015

Palm grip
B20

The palm grip B20 has different equipment options for many requirements.
It is compatible with our multi-axis controller or mounted on hydraulic drives.
The palm grip has a highly flexible single wire (0,1 qmm, 450 mm long).
The mounting piece for the drive rod can be supplied with a tapped hole 12 mm.

Technical data

Operating temperature	-40°C til +60°C
Degree of protection	IP 65
Contact complement	1,5A 24VDC13 (*¹ 0,1A 24VDC13)

Example

B20L	- 2D	W	K	V21	H13	- X

Basic unit

B20L	Palm grip left with hand pad
B20R	Palm grip right with hand pad

Digital actuating element

D	Push button KDA21 *¹
	Colour: red, black, yellow, green, blue, white, orange
HD	Hall-push button *(see page 125)*
W	Rocker switch T-0-T
W	Rocker switch 0-T
W	Rocker switch R-0-T
W	Rocker switch R-0-R
W	Rocker switch 0-R
W	Rocker switch R-R
K	Lever switch
KT	Cross switch T-0-T/T-0-T
V	Vibration
	Impulse 24VDC ED 100%

Analog actuating element

S9	Hall-Thumb rocker
	Output 0,5...2,5...4,5V redundant opposite
V21	Hall-minijoystick
	Output 0,5...2,5...4,5V redundant opposite
P9	Thumbwheel
	Potentiometer 5kOhm
H13	Hall-rotary grip
	Output 0,5...2,5...4,5V redundant opposite

Special model

X	Special / customer-specific

Technical details may vary based on configuration or application! Technical data subject to change without notice!

2

Edition:
Push button installed
Cross switch installed

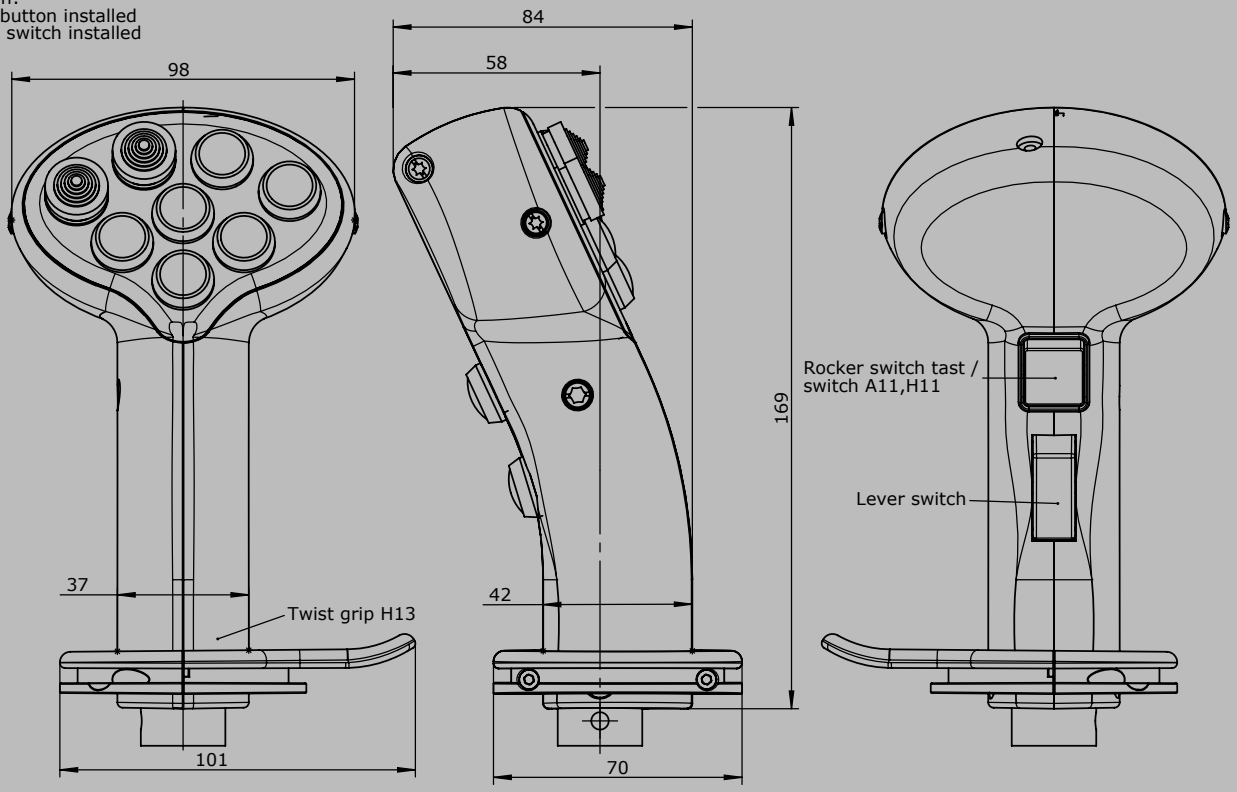

Edition:
Hall rocker switch
Push button

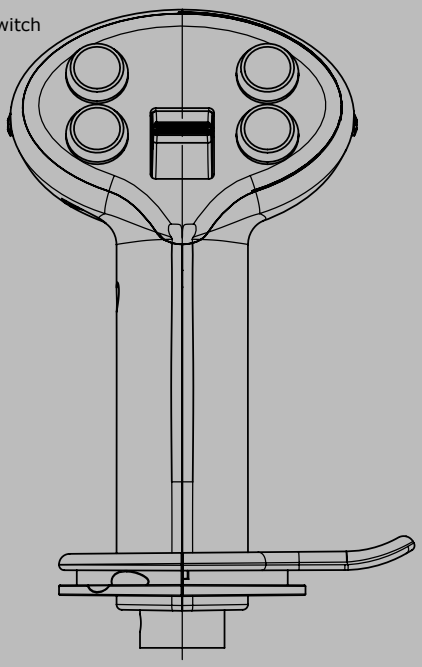

Edition:
Multi-axis controller V21
Potentiometer drive PA9
Push button

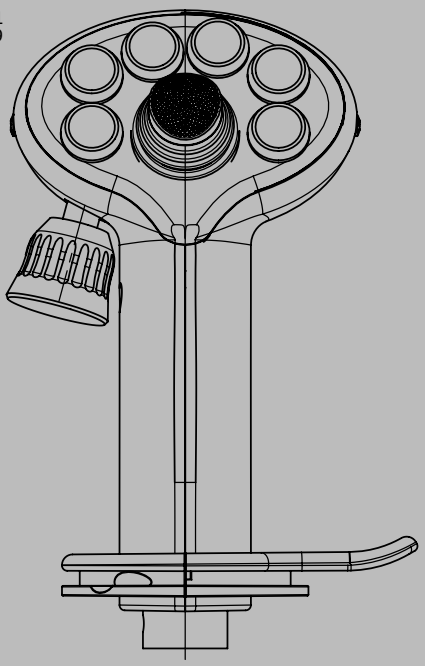

Technical details may vary based on configuration or application! Technical data subject to change without notice!

V2015/1 10.02.2015

Palm grip
B22

GESSMANN Industrial Controllers

The palm grip B22 has different equipment options for many requirements.
It is compatible with our multi-axis controller or mounted on hydraulic drives.
The palm grip has a highly flexible single wire (0,1 qmm, 450 mm long).
The mounting piece for the drive rod can be supplied with a tapped hole 7 mm.

Technical data

Operating temperature	-40°C til +60°C
Degree of protection	IP 65
Contact complement	1,5 24VDC13 (*¹ 0,1A 24VDC13)

Example

B22AL	- 4D	W	- X

Basic unit

B22L	Palm grip left
B22R	Palm grip right
B22AL	Palm grip left with support
B22AR	Palm grip right with support

Digital actuating element

D	Push button KDA21 *¹
	Colour: red, black, yellow, green, blue, white, orange
W*	Rocker switch T-0-T
W*	Rocker switch 0-T
W*	Rocker switch R-0-T
W*	Rocker switch R-0-R
W*	Rocker switch 0-R
W*	Rocker switch R-R
	**Only possible with version with support!*

Special model

X	Special / customer-specific

Technical details may vary based on configuration or application! Technical data subject to change without notice!

GESSMANN Industrial Controllers

2

B22

Edition:
Push button installed Pos. 1,2,3,4

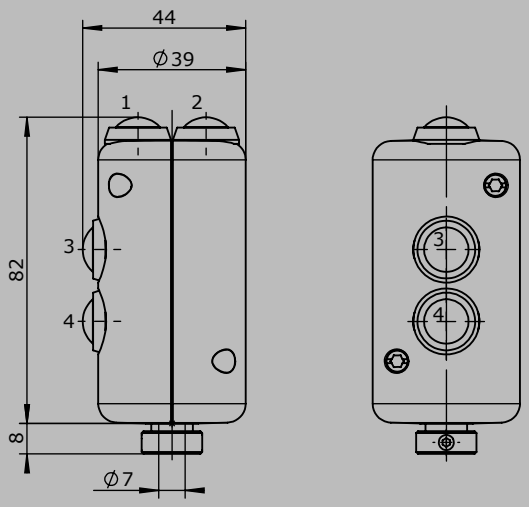

Edition:
Push button installed Pos. 3,4,10

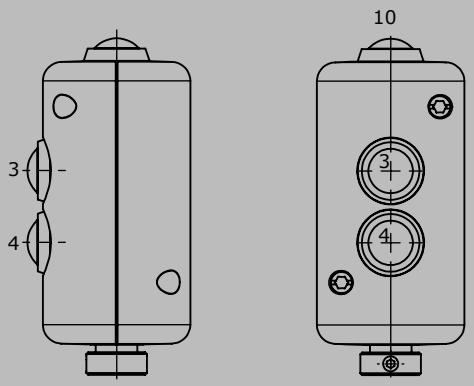

B22A

Editon:
Push button installed Pos. 3,4,5,6,7,8

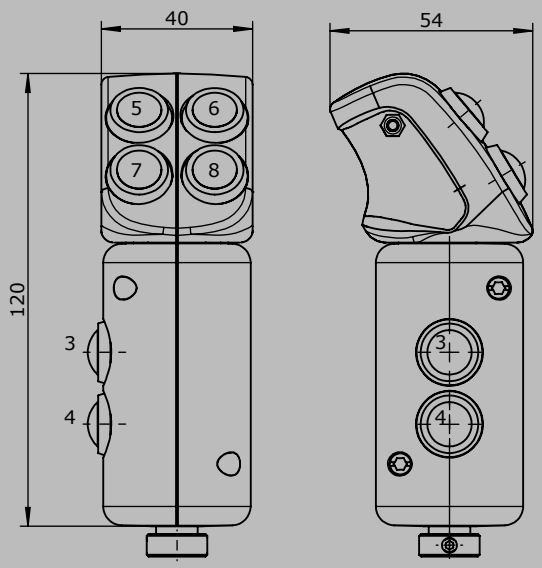

Edition:
Push button installed Pos. 3,4,5,6,9
Rocker switch installed Pos. 7-8

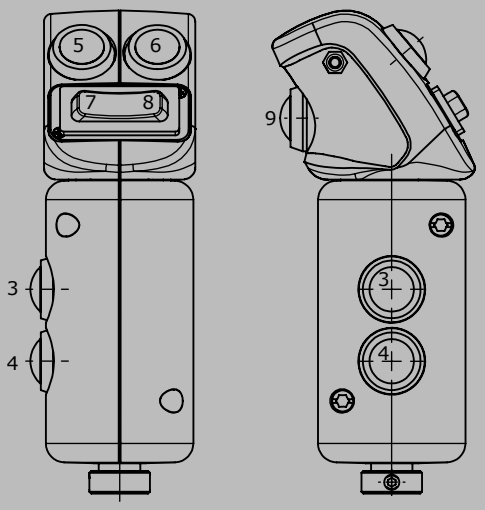

Technical details may vary based on configuration or application! Technical data subject to change without notice!

V2015/1 10.02.2015

Palm grip
B23

GESSMANN Industrial Controllers

The palm grip B23 has different equipment options for many requirements.
It is compatible with our multi-axis controller or mounted on hydraulic drives.
The palm grip has a highly flexible single wire (0,1 qmm, 450 mm long).
The mounting piece for the drive rod can be supplied with a tapped hole 12 mm (standard) or 10 mm.

Technical data

Operating temperature	-40°C til +60°C
Degree of protection	IP 65
Contact complement	1,5A 24VDC13 (*¹ 0,1A 24VDC13)

Example

		B23R	- 2D	W	V21	- X
Basic unit						
B23L	Palm grip left					
B23R	Palm grip right					
Digital actuating element						
D	Push button KDA21 *¹					
	Colour: red, black, yellow, green, blue, white, orange					
W	Rocker switch T-0-T					
W	Rocker switch 0-T					
W	Rocker switch R-0-T					
W	Rocker switch R-0-R					
W	Rocker switch 0-R					
W	Rocker switch R-R					
Analog actuating element						
S9	Hall-Thumb rocker					
	Output 0,5...2,5...4,5V redundant opposite					
V21	Hall-minijoystick					
	Output 0,5...2,5...4,5V redundant opposite					
Special model						
X	Special / customer-specific					

2

Technical details may vary based on configuration or application! Technical data subject to change without notice!

GESSMANN Industrial Controllers

2

B23R

Push button installed Pos. 1 - 8

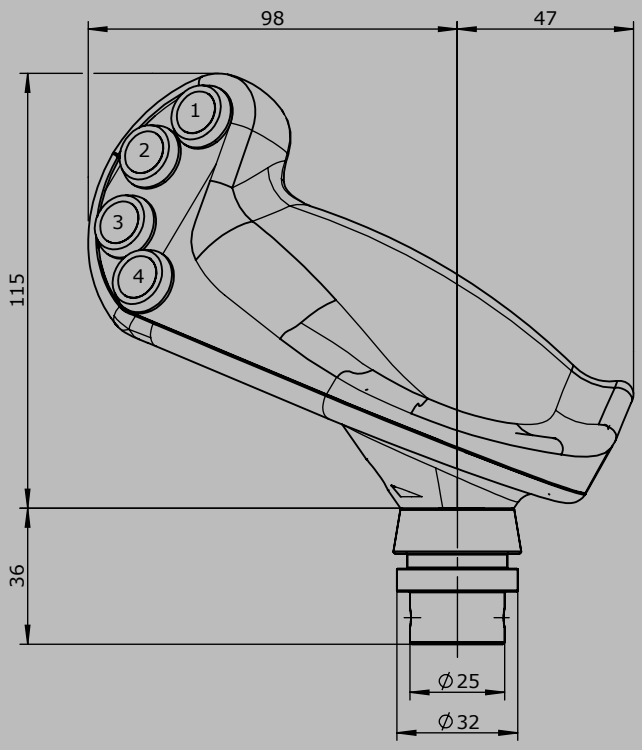

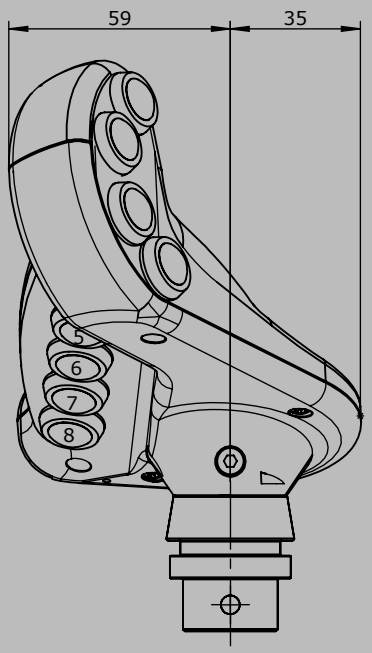

B23L

Push button installed Pos. 1 - 8

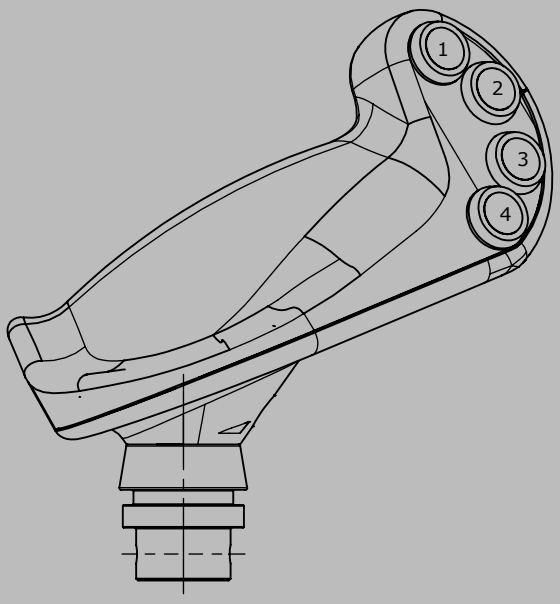

Edition :
Multi-axis controller V21
Push button installed Pos. 5,6,7,8

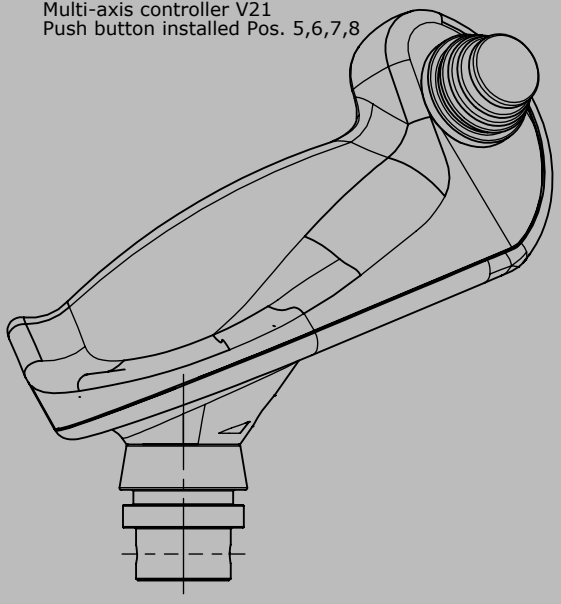

Technical details may vary based on configuration or application! Technical data subject to change without notice!

V2015/1 10.02.2015

Palm grip
B24

GESSMANN
Industrial Controllers

The palm grip B24 has different equipment options for many requirements.
It is compatible with our multi-axis controller or mounted on hydraulic drives.
The superior grip surface is framed by an illuminated colored ring element.
The palm grip has a highly flexible single wire (0,1 qmm, 450 mm long).
The mounting piece for the drive rod can be supplied with a tapped hole 12 mm (standard) or 10 mm.

Technical data

Operating temperature	-40°C til +60°C
Degree of protection	IP 54
Contact complement	1,5A 24VDC13 (*1 0,1A 24VDC13)

Example

B24	- D	2W	V21	- IWH	- X

Basic unit

B24	Palm grip

Digital actuating element

D	Push button KDA21 *1
	Colour: red, black, yellow, green, blue, white, orange
W	Rocker switch T-0-T
W	Rocker switch 0-T
W	Rocker switch R-0-T
W	Rocker switch R-0-R
W	Rocker switch 0-R
W	Rocker switch R-R

Analog actuating element

V21	Hall-minijoystick
	Output 0,5...2,5...4,5V redundant opposite
H13	Hall-rotary grip
	Output 0,5...2,5...4,5V redundant opposite

Additional option

IWH	Colour ring white, illuminated
IRD	Colour ring red, illuminated
IBL	Colour ring blue, illuminated
WH	Colour ring white
RD	Colour ring red
BL	Colour ring blue
GN	Colour ring green
YE	Colour ring yellow

Special model

X	Special / customer-specific

Technical details may vary based on configuration or application! Technical data subject to change without notice!

2

Edition :
Push button installed Pos. 1 - 6, 10
Rocker switch / taste installed Pos. 7,(8), 9
() left

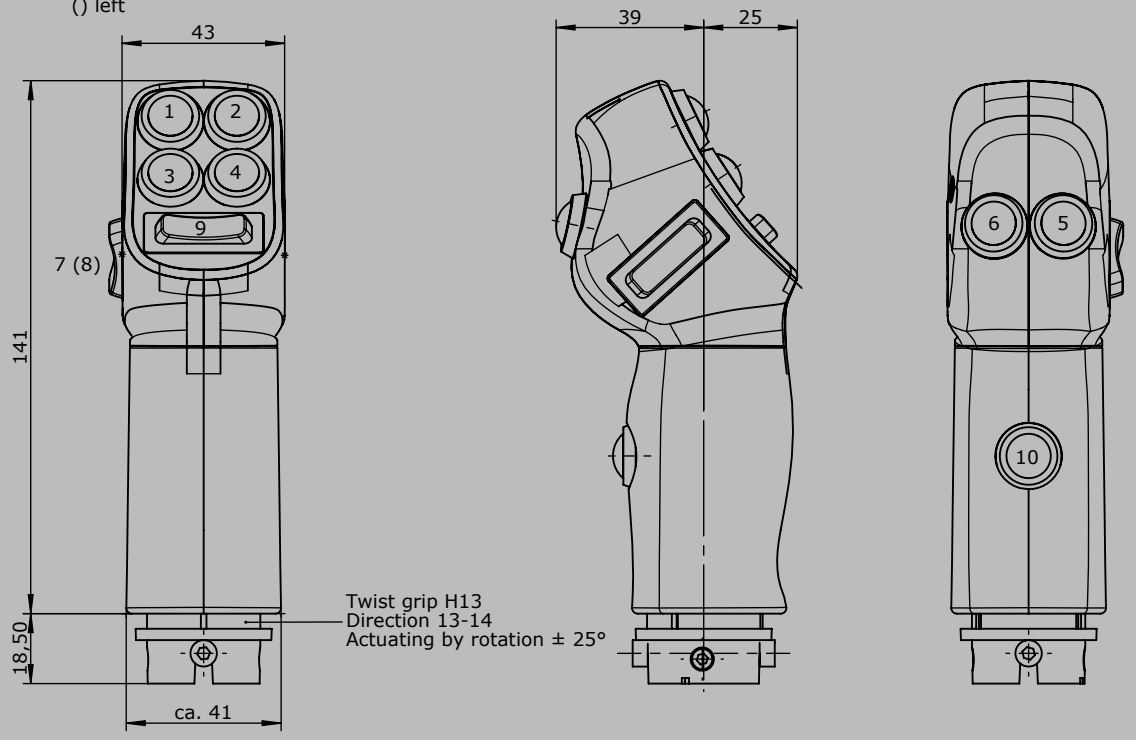

Edition :
Push button installed Pos. 5,6,10
Rocker switch / taste Pos. 7,(8), 9
multi-axis controller V21 Pos. 11
() left

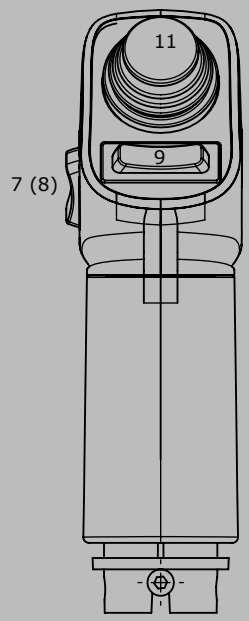

Technical details may vary based on configuration or application! Technical data subject to change without notice!

V2015/1 10.02.2015

Palm grip
B25

GESSMANN Industrial Controllers

The palm grip B25 has different equipment options for many requirements.
It is compatible with our multi-axis controller or mounted on hydraulic drives.
The palm grip has a highly flexible single wire (0,1 qmm, 450 mm long).
The mounting piece for the drive rod can be supplied with a tapped hole 12 mm (standard) or 10 mm.

Technical data

Operating temperature	-40°C til +60°C
Degree of protection	IP 65
Contact complement	1,5A 24VDC 13 (*¹ 0,1A 24VDC13)

Example

		B25L	- 2D	W	K	SE	V21	H13	- X
Basic unit									
B25L	Palm grip left								
B25R	Palm grip right								
Digitale actuating element									
D	Push button KDA21 *¹								
	Colour: red, black, yellow, green, blue, white, orange								
HD	Hall-push button *(see page 125)*								
W	Rocker switch T-0-T								
W	Rocker switch 0-T								
W	Rocker switch R-0-T								
W	Rocker switch R-0-R								
W	Rocker switch 0-R								
W	Rocker switch R-R								
K	Lever switch								
SR	Sliding switch R-O-R								
ST	Slide switch T-0-T								
SE	Sensor button capazitiv with external control electronics								
S	Sensor button capazitiv without external control electronics								
	(consistent with V85/VV85 and V25 with interface E4xx+E5xx)								
V	Vibration								
Analog actuating element									
S9	Hall-Thumb rocker								
	Output 0,5...2,5...4,5V redundant opposite								
V21	Hall-minijoystick								
	Output 0,5...2,5...4,5V redundant opposite								
PA13	Rotary grip								
	Potentiometer T375 2x5 kOhm with direction contact								
H13	Hall-rotary grip								
	Output 0,5...2,5...4,5V redundant opposite								
Special model									
X	Special / customer-specific								

2

Technical details may vary based on configuration or application! Technical data subject to change without notice!

GESSMANN Industrial Controllers

B25R

Push button installed Pos. 1 - 11
Lever switch installed Pos. 12

Rocker switch
installed Pos. 9+10 possible

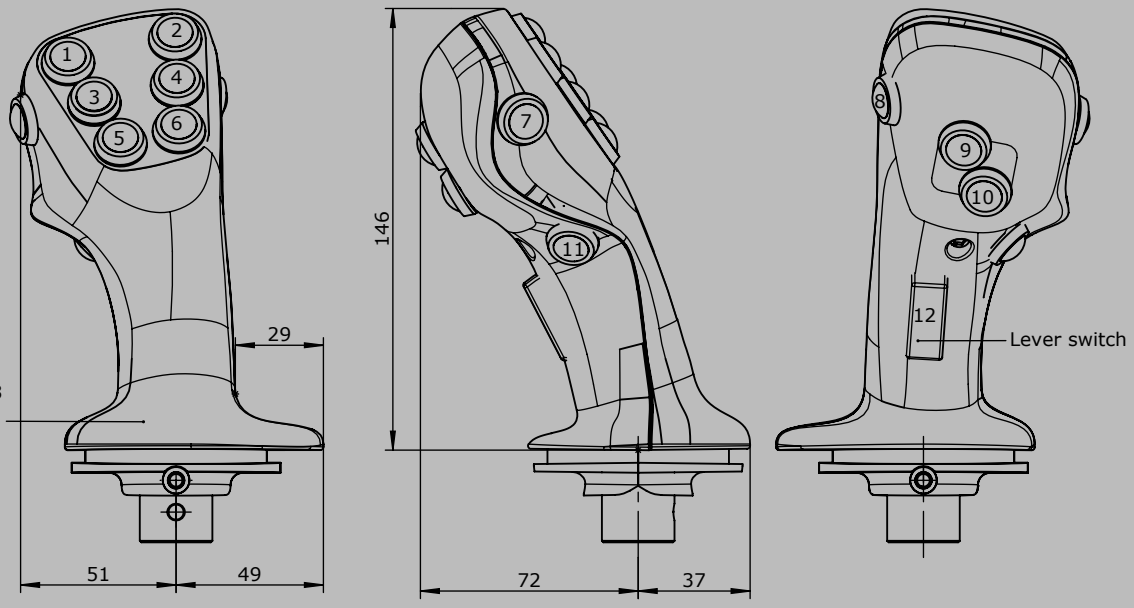

Twist grip PA13,H13
Direction 13-14
Actuating by
rotation ± 25°

B25L

Push button installed Pos. 1 - 11
Lever switch installed Pos. 12

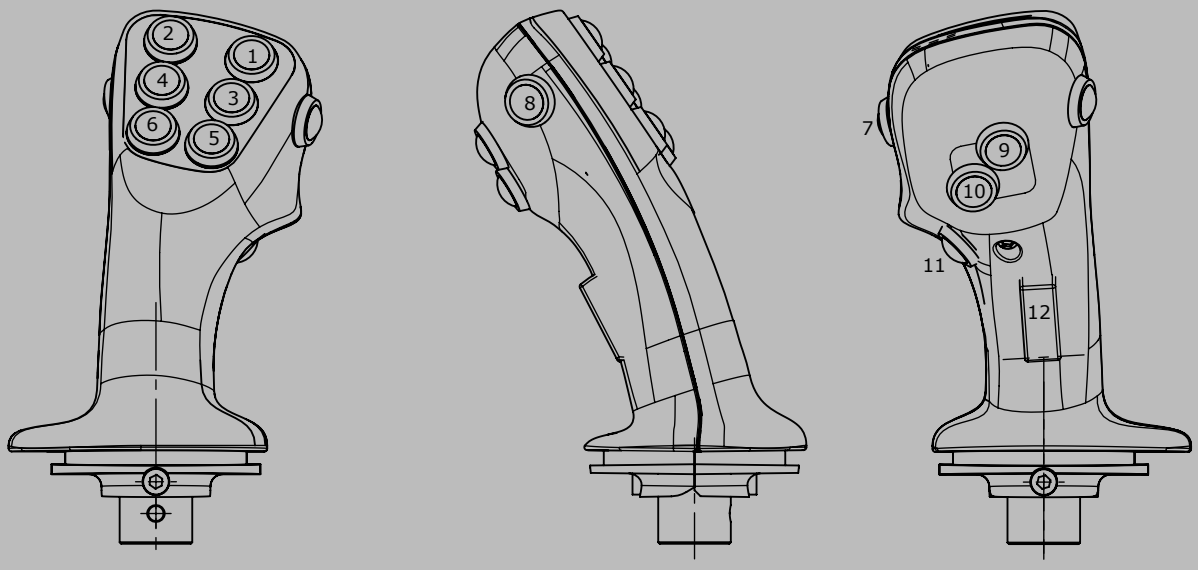

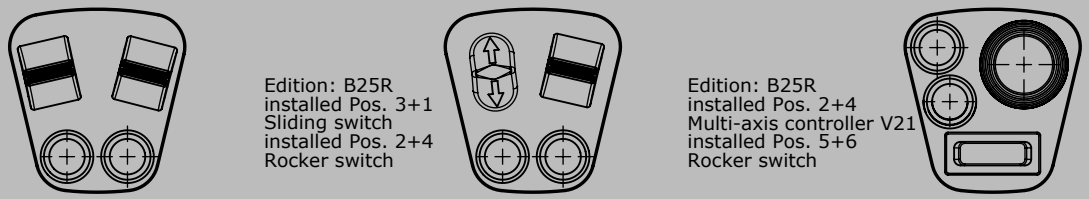

Edition: B25R
installed Pos. 3+1
Rocker switch
installed Pos. 2+4
Rocker switch

Edition: B25R
installed Pos. 3+1
Sliding switch
installed Pos. 2+4
Rocker switch

Edition: B25R
installed Pos. 2+4
Multi-axis controller V21
installed Pos. 5+6
Rocker switch

Technical details may vary based on configuration or application! Technical data subject to change without notice!

V2015/1 10.02.2015

Palm grip
B28

The palm grip B28 has different equipment options for many requirements.
It is compatible with our multi-axis and single-axis controller or mounted on hydraulic drives.
The palm grip has a highly flexible single wire (0,1 qmm, 450 mm long).
The mounting piece for the drive rod can be supplied with a tapped hole 10 mm (standard).

Technical data

Operating temperature	-40°C til +60°C
Degree of protection	IP 54

Example

	B28	- 2D	SE	- X
Basic unit				
B28 Palm grip				
Digital actuating element				
D Push button (1,5A 24VDC13)				
Colour: red, black, yellow, green, blue, grey				
SE Sensor button capazitiv with external control electronics				
S Sensor button capazitiv without external control electronics				
(consistent with V85/VV85 and V25 with interface E4xx+E5xx)				
Special model				
X Special / customer-specific				

2

2

Edition:
Push button installed
Pos. 1,3,4,6,7,8
Sensor button function on left or right available

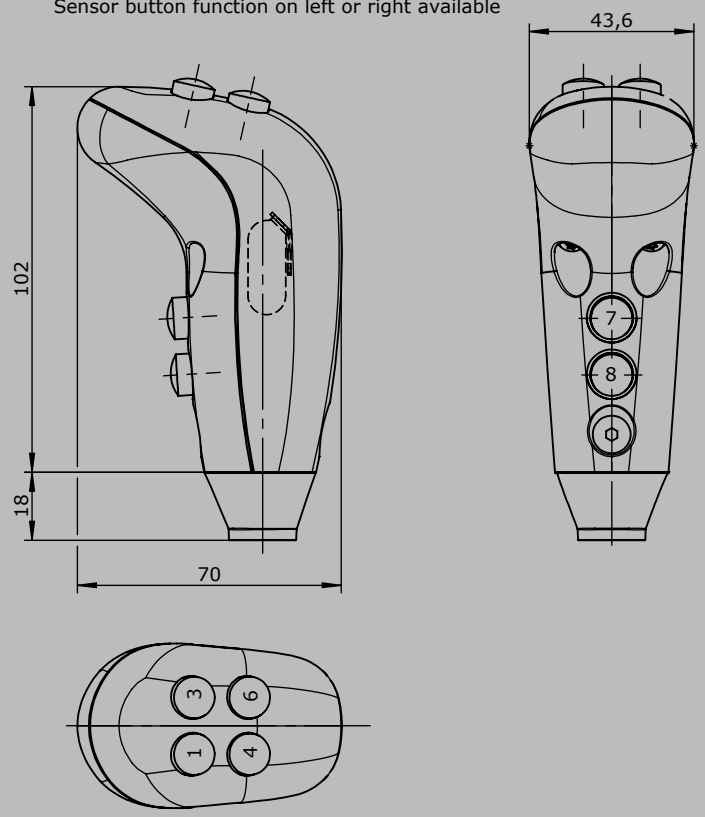

Edition:
Push button installed
Pos. 2,5,7,8
Sensor button function on left or right available

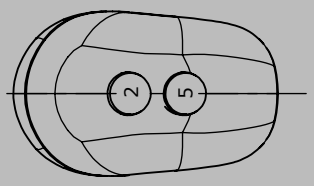

Edition:
Push button installed
Pos. 7,8,9,10
Sensor button function on left or right available

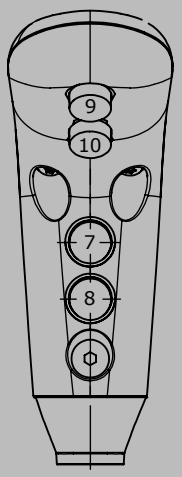

Technical details may vary based on configuration or application! Technical data subject to change without notice!

V2015/1 10.02.2015

Palm grip
B29

The palm grip B29 has different equipment options for many requirements.
It is compatible with our multi-axis and single-axis controller or mounted on hydraulic drives.
The palm grip has a highly flexible single wire (0,1 qmm, 450 mm long).
The mounting piece for the drive rod can be supplied with a tapped hole 12 mm (standard) or 10 mm.

Technical data

Operating temperature	-40°C til +60°C
Degree of protection	IP 65
Contact complement	0,1A 24VDC13

Example

	B29	- 2D	- X
Basic unit			
B29 Palm grip			
Digital actuating element			
D Push button KDA21			
Colour: red, black, yellow, green, blue, white, orange			
SE Sensor button capazitiv with external control electronics			
S Sensor button capazitiv without external control electronics			
(consistent with V85/VV85 and V25 with interface E4xx+E5xx)			
Special model			
X Special / customer-specific			

2

Technical details may vary based on configuration or application! Technical data subject to change without notice!

B29

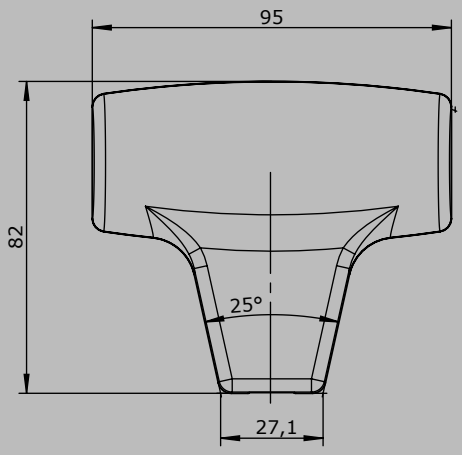

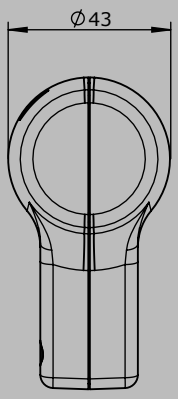

Edition:
Push button installed Pos. 1-6

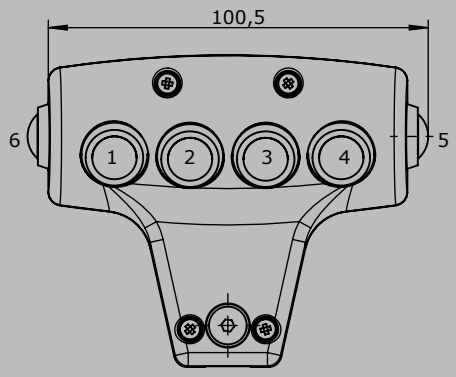

Edition:
Sensor installed Pos. 6,
Push button installed Pos. 3,4

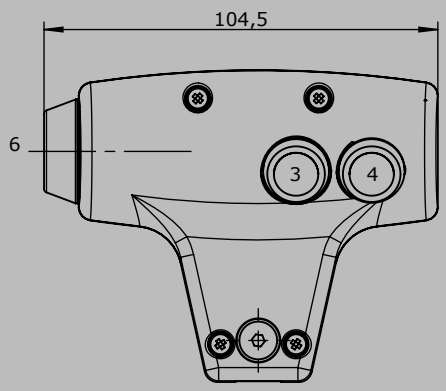

Edition:
Sensor installed Pos. 5,
Push button installed Pos. 1,2

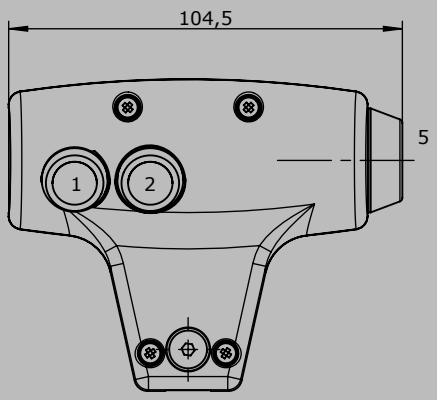

Technical details may vary based on configuration or application! Technical data subject to change without notice!

V2015/1 10.02.2015

Housing for our switching device

GESSMANN Industrial Controllers

Dimension outside in mm	Dimension inside in mm	Remarks	Weight KG	Form
Steel sheet housing material thickness 1/1,5 mm Predection IP 54 painting RAL 7032 pebble-grey textured varnish				
200 x 200 x 92	166 x 166 x 90		1,3	B 200
230x 230 x 105	196 x 196 x 102		1,4	B 230
230 x 340 x 105	196 x 306 x 102		1,5	B 230 x 340
230 x 440 x 105	196 x 406 x 102		1,6	B 230 x 440
250 x 250 x 150	216 x 216 x 147		1,6	B 250 x 250
150 x 400 x 105	116 x 366 x 102		3,2	B 150 x 400
150 x 500 x 105	116 x 466 x 102		3,5	B 150 x 500
150 x 600 x 105	116 x 566 x 102		3,8	B 150 x 600
260 x 500 x 105	226 x 466 x 102		3,8	B 260 x 500
260 x 600 x 105	226 x 566 x 102		4,2	B 260 x 600
dimensions special		On enquiry		
Plastic housing polycarbonat Predection IP 65 colour RAL 7035 fair-grey				
120 x 122 x 105	113 x 115 x 98		0,35	l 120 x 122
120 x 160 x 140	113 x 134 x 133		0,6	l 120 x 160
160 x 240 x 120	153 x 215 x 114		0,8	l 160 x 240
160 x 360 x 100	153 x 352 x 94		1,0	l 160 x 360
230 x 300 x 110	223 x 293 x 103		1,15	l 230 x 300
Plastic housing polyester Predection IP 65 colour RAL 7000 grey				
220 x 335 x 115	200 x 292 x 108	Colour altern. RAL 9011 black	1,65	l 220 x 335
220 x 465 x 115	200 x 432 x 108	Colour altern. RAL 9011 black	2,24	l 220 x 465
250 x 255 x 120	236 x 243 x 110		2,65	l 250 x 255
250 x 400 x 120	236 x 386 x 110		3,65	l 250 x 400
250 x 600 x 120	236 x 586 x 110		5,24	l 250 x 600
Accessory parts				
Hinges each housing (2 pcs.)			0,2	
Armrest with clamp adjustable straps			0,5	
Cable entry M20 cable 7-13 mm		With anti-kink predection and strain relief	0,15	
Cable entry M32 cable 11-21 mm		With anti-kink predection and strain relief	0,2	
Cable entry M 40 cable 19-28 mm		With anti-kink predection and strain relief	0,25	
Pillar with flange 100 x 100 x 535 mm high		Flange 150 x 150 mm	14,0	
Indicating labels not engraved				
Indicating labes with engraving		Character		

Technical details may vary based on configuration or application! Technical data subject to change without notice!

Attachment for crane control unit, portable control unit and housing

GESSMANN Industrial Controllers

Command and indicating devices 22mm (Siemens Typ 3SB) incl. indicating label		Contact-complement	Weight KG	Type
Push button		1 S + 1 Ö	0,040	D
Selector switch 0-1	2 positions	1 S + 1 Ö	0,050	W
Selector switch 1-0-2	3 positions	2 S + 2 Ö	0,060	W
Key switch 0-1	2 positions	1 S + 1 Ö	0,130	S
Key switch 1-0-2	3 positions	2 S + 2 Ö	0,140	S
Mushroom key switch latching		1 S + 1 Ö	0,080	PS
Mushroom head push button latching		1 Ö	0,060	PV
Illuminated push button diode 24 VDC/AC		1 S + 1 Ö	0,040	LD
Illuminated push button diode 220 VAC		1 S + 1 Ö	0,040	LD
Indicator light diode 24 VDC/AC			0,040	L
Indicator light diode 220 VAC			0,040	L
Coordinate switch 2 positions horizontal T-O-T 3SB1201-7DV01		2 S	0,102	K
Coordinate switch 2 positions vertical T-O-T 3SB1201-7FV01		2 S	0,102	K
Coordinate switch 4 positions T-O-T / T-O-T 3SB1208-7JV01		4 S	0,112	K
Switching element in addition		1S + 1Ö	0,010	
Other command and indicating devices				
Summer			0,250	
Knee button FAK-S/KC/I		1 S + 1 Ö	0,350	
Foot button		1 S + 1 Ö	0,450	
Attachment				
Drilling 22 mm				
Blind plug 22 mm				
Cutouts for display devices				
Microphone with gooseneck				
Power supply 230V/24VDC for driver seat				

Technical details may vary based on configuration or application! Technical data subject to change without notice!

V2015/1 10.02.2015

Crane control unit
KST 4 swiveling

The KST 4 is an ergonomically designed swiveling crane control chair which provides a high degree of comfort.

Equipment boxes:
The sheet steel equipment boxes are vertically and horizontally adjusted. The arrangement of the joysticks, indicators and control devices is customised according to customer specifications.
Cabling is run through aduct in the cross-member. (Terminal block)
Special boxes available upon request.

Driver seat:
As standard the KST 4 is fitted with a KFS 6 seat. The seat itself is fitted with a hydraulic vibration absorption system complete with weight adjustment to ensure that the comfort level is fitted with armrests and a headrest. There is the option to have the seat covered with air-permeable artificial leather.

Cross-member with swivel base:
The cover of the sheet steel cross-member including the driver's seat is forward foldable.
Thereby all wirings, terminals and bushings are easily accessible during commissioning and maintenance.
Swivel base has zero-clearance bearing and can be locked by a friction brake.

Surface treatment:
Base coat and textured varnish
Standard colour RAL 9011 black

Example

KST 41	- 3	- M1	- F1	- LK	/	KFS 11	/	V64	/	V64.1	/	KL	/	X

Basic unit

KST 41	With equipment boxes 160x420 mm
KST 42	With equipment boxes 200x420 mm

Base unit

1	Swiveling 180° left, 90° right with friction brake
2	Electric swiveling 180° left, 90° right
3	Not swiveling
4	Without base frame

Attachment

M1	Monitor mounting with monitor housing
M2	Monitor mounting with monitor mounting braket
M3	Monitor mounting without monitor housing/ -mounting braket
F1	Footrest mounted dispatch 1 KBF/433
H	Heater 2x2 kW with ventilator
LK	Plate for horizontal manual adjustment of crane control unites +/- 250 mm

Driver seat

KFS 11*	*(included in the delivery!)*
KFS 9*	
KFS 10*	
KFS 12*	

**Description see driver seat page 186*

Technical details may vary based on configuration or application! Technical data subject to change without notice!

Crane control unit
KST 4 swiveling

KST 41 - 3 - M1 - F1 - LK / KFS 11 / V64 / V64.1 / KL / X

Mountig for equipment boxes

V...	Multi-axis controller *(see page 1)*
S...	Single-axis controller *(see page 65)*
D...	Double-handle controller *(see page 45)*
N...	Control-switch *(see page 101)*
...	*More command and indicating devices (see page 162)*

Wiring

KL	Without wiring, each terminal block built in each terminal
KLV	On terminal block 4 qmm with single wire 1 qmm each terminal
KLV	On SPS (SPS provision) with single wire 1 qmm each terminal
KLVA	External wiring single wire highly flexible 1,5 qmm 5 m long, each terminal

Special model

X	Special / customer-specific
X[1]	Special painted

3

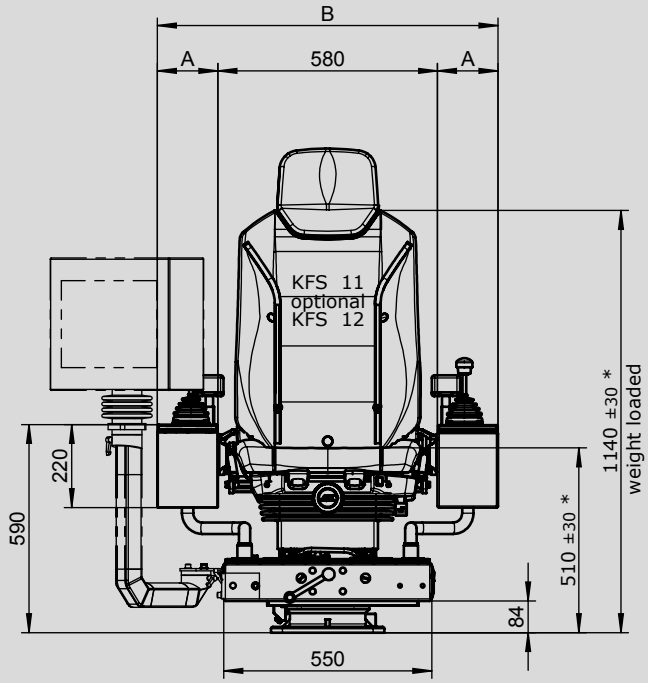

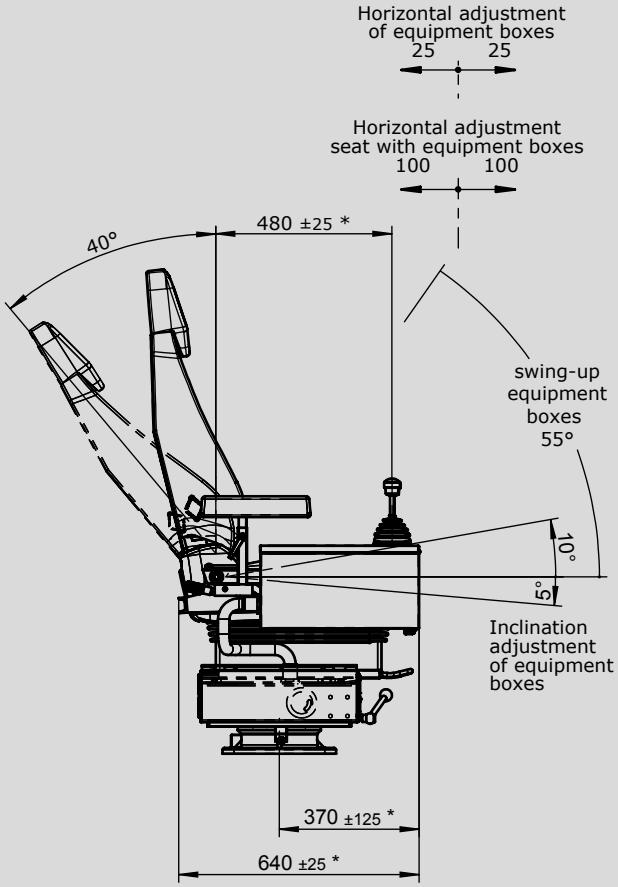

with heating

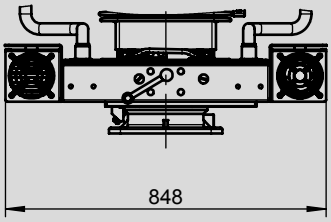

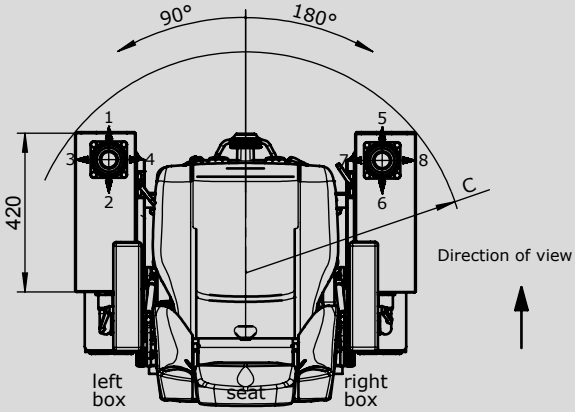

Floor mounting

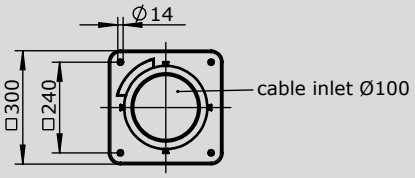

* adjustable

Type	Dim. A	Dim. B	Dim. C
KST 41	160	900	max. 670 min. 570
KST 42	200	980	max. 700 min. 600

Technical details may vary based on configuration or application! Technical data subject to change without notice!

Crane control unit
KST 5 swiveling

GESSMANN Industrial Controllers

The KST 5 is an ergonomically designed swiveling crane control chair which provides a high degree of comfort.

Equipment boxes:
The equipment boxes are made from sheet steel and as standard have a hinged lid with locking feature. This allows for easy inspection and maintenance. The side of the equipment boxes is as standard fitted with an inspection plate which again is lockable. The arrangement of the joystick, indicators and control devices is cutomised according to customer specifications. This combined with the custom sized and profiled equipment boxes that are available means that the KST 5 is very flexible and customisable solution.

Driver seat:
As standard the KST 5 is fitted with a KFS 6 seat. The seat itself is fitted with a hydraulic vibration absorption system complete with weight adjustment to ensure that the comfort level is fitted with armrests and a headrest. There is the option to have the seat covered with air-permeable artificial leather.

Cross-member with swivel base:
The cover of the sheet steel cross-member including the driver's seat is forward foldable.
Thereby all wirings, terminals and bushings are easily accessible during commissioning and maintenance.
Swivel base has zero-clearance bearing and can be locked by a friction brake.

Surface treatment:
Base coat and textured varnish
Standard colour RAL 9011 black

Example

KST 51	- 3	- M1	- F1	- LK	/	KFS 11	/	V64	/	V64.1	/	KL	/	X

Basic unit

KST 51	With equipment boxes 200x580 mm
KST 52	With equipment boxes 270x580 mm
KST 54	With equipment boxes 320x580 mm
	Special boxes for demand!

Base unit

1	Swiveling 180° left, 90° right with friction brake
2	Electric swiveling 180° left, 90° right
3	Not swiveling

Attachment

M1	Monitor mounting with monitor housing
M2	Monitor mounting with monitor mounting braket
M3	Monitor mounting without Monitor housing/-mounting braket
F1	Footrest KBF/433
H	Heater 2x2 kW with ventilator 240V AC
LS	Plate for horizontal manual adjustment for control units +/- 75 mm
LK	Plate for horizontal manual adjustment for control units +/- 250 mm
Label without engraving for multi-axis-/ single-axis controller	
Label with engraving for multi-axis-/ single-axis controller	

3

Technical details may vary based on configuration or application! Technical data subject to change without notice!

V2015/1 10.02.2015

Crane control unit
KST 5 swiveling

KST 51 - 3 - M1 - F1 - LK / KFS 11 / V64 / V64.1 / KL / X

Driver seat

KFS 11*	*(included in the delivery!)*
KFS 9*	
KFS 10*	
KFS 12*	

**Description see driver seat page 186*

Mounting for equipment boxes

V...	Multi-axis controller *(see page 1)*
S...	Single-axis controller *(see page 65)*
D...	Double-handle controller *(see page 45)*
N...	Control-switch *(see page 101)*
...	*More command and indicating devices (see page 162)*

Wiring

KL	Without, but terminal block built each terminal
KLV	On terminal block 4 qmm with single wire 1 qmm each terminal
KLV	On SPS (SPS provision) with single wire 1 qmm each terminal
KLVA	External wiring single wire highly flexible 1,5 qmm 5 m long, each terminal

Special model

X	Special / customer-specific
X1	Special painted

3

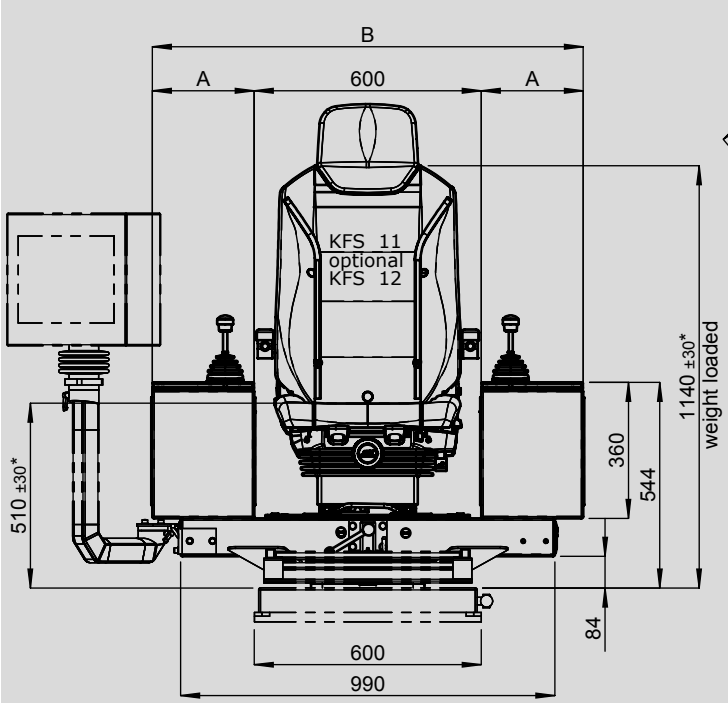

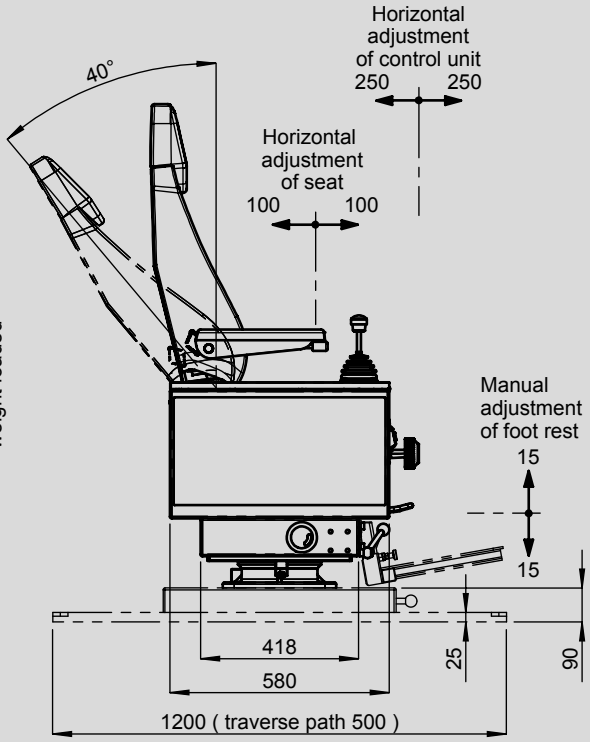

Floor mounting

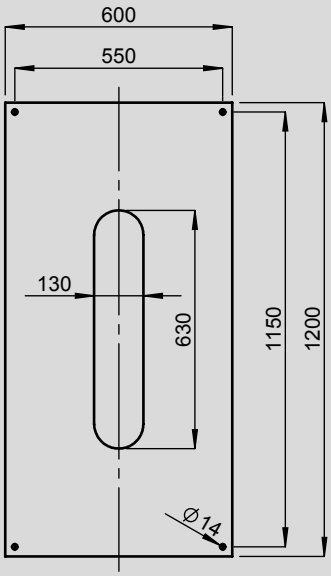

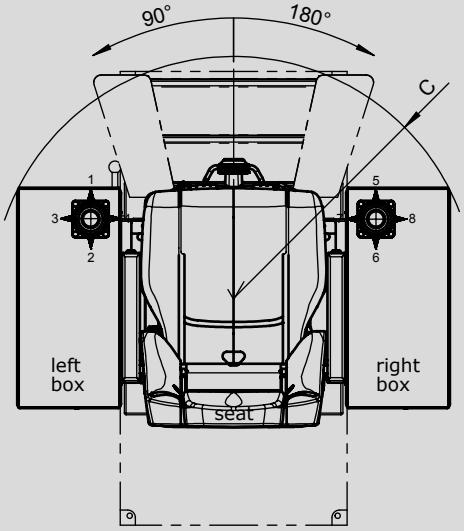

Floor mounting

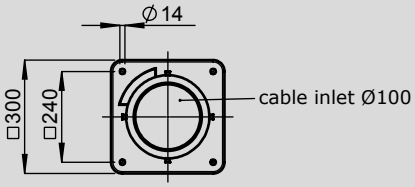

* adjustable

Type	Dim. A	Dim. B	Dim. C
KST 51	200	1000	580
KST 52	270	1140	640
KST 54	320	1240	690

Technical details may vary based on configuration or application! Technical data subject to change without notice!

V2015/1 20.08.2015

Crane control unit
KST 6 swiveling

GESSMANN Industrial Controllers

The KST 6 is an ergonomically designed swiveling crane control chair which provides a high degree of comfort.

Equipment boxes:
The sheet steel equipment boxes are vertically and horizontally adjusted. The arrangement of the joysticks, indicators and control devices is customised according to customer specifications.
Cabling is run through adcut in the cross-member. (Terminal block)

Driver seat:
As standard the KST 6 is fitted with a KFS 6 seat. The seat itself is fitted with a hydraulic vibration absorption system complete with weight adjustment to ensure that the comfort level is fitted with armrests and a headrest. There is the option to have the seat covered with air-permeable artificial leather.

Cross-member with swivel base:
The cover of the sheet steel cross-member including the driver's seat is forward foldable.
Thereby all wirings, terminals and bushings are easily accessible during commissioning and maintenance.
Swivel base has zero-clearance bearing and can be locked by a friction brake.

Surface treatment:
Base coat and textured varnish
Standard colour RAL 9011 black

Example

KST 6	- 3	- M1	- F1	- LK	/	KFS 11	/	V64	/	V64.1	/	KL	/	X

Basic unit

KST 6	With equipment boxes

Base unit

1	Swiveling 180° left, 90° right with friction brake
2	Electric swiveling 180° left, 90° right
3	Not swiveling
4	Without base frame

Attachment

M1	Monitor mounting with monitor housing
M2	Monitor mounting with monitor mounting braket
M3	Monitor mounting without monitor housing/-mounting braket
F1	Footrest KBF/433
H	Heater 2x2 kW with ventilator
LK	Plate for horizontal manual adjustment for control unites +/- 250 mm

Driver seat

KFS 11*	*(included in the delivery!)*
KFS 9*	
KFS 10*	
KFS 12*	

**Description see driver seat page 186*

3

Technical details may vary based on configuration or application! Technical data subject to change without notice!

Crane control unit
KST 6 swiveling

KST 6 - 3 - M1 - F1 - LK / KFS 11 / V64 / V64.1 / KL / X

Mounting for equipment boxes

V...	Multi-axis controller *(see page 1)*
S...	Single-axis controller *(see page 65)*
D...	Double-handle controller *(see page 45)*
N...	Control-switch *(see page 101)*
...	*More command and indicating devices (see page 162)*

Wiring

KL	Without, but terminal block built each terminal
KLV	On terminal block 4 qmm with single wire 1 qmm each terminal
KLV	On SPS (SPS provision) with single wire 1 qmm each terminal
KLVA	External wiring single wire highly flexible 1,5 qmm 5 m long each terminal

Special model

X	Special / customer-specific
X¹	Special painted

3

Technical details may vary based on configuration or application! Technical data subject to change without notice!

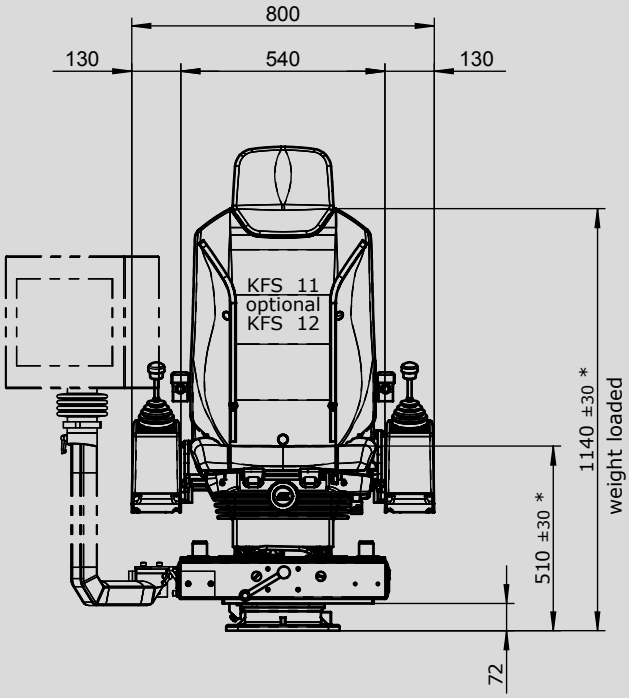

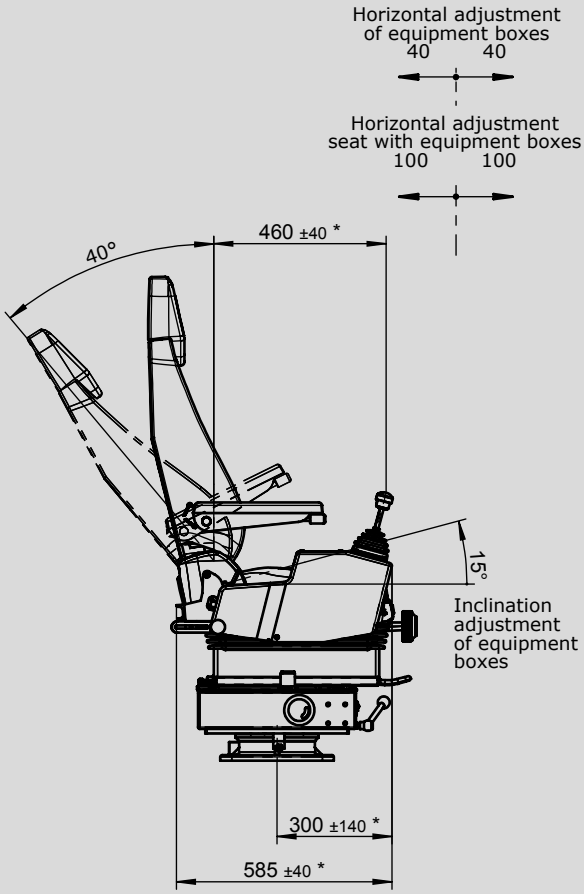

with heating

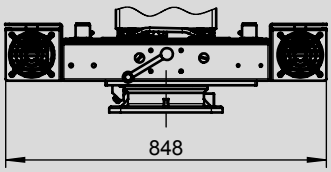

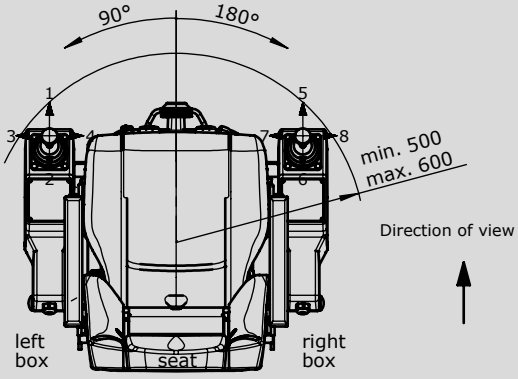

Floor mounting

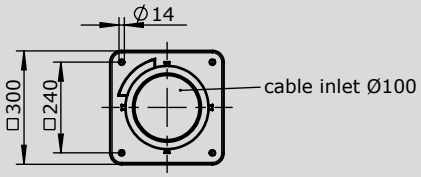

* adjustable

Technical details may vary based on configuration or application! Technical data subject to change without notice!

Crane control unit
KST 7

GESSMANN Industrial Controllers

The KST 7 is an ergonomically designed swiveling crane control chair which provides a high degree of comfort.

Equipment boxes:
The equipment boxes are made from sheet steel and as standard have a hinged lid with locking feature. This allows for easy inspection and maintenance. The side of the equipment boxes is as standard fitted with an inspection plate which again is lockable. The arrangement of the joystick, indicators and control devices is cutomised according to customer specifications. This combined with the custom sized and profiled equipment boxes that are available means that the KST 7 is very flexible and customisable solution.

Driver seat:
The tipped spring mounted seat KFS 4 is fit with an hydraulic vibration absorption system incl. weight adjustment. With the folding spring mounted seat you can also arrive your workplace in small cabins.

Base plate:
The cran control unit is available with or without base plate.

Surface treatment:
base coat and textured varnish
Standard colour RAL 7032 pebble-grey

Example

KST 7	- 1	/	KFS 11	/	V64	/	V64.1	/	KL	/	X

Basic unit

KST 7	with equipment boxes 290x500 mm
KST 75	with equipment boxes 210x500 mm
	Special boxes for demand!

Base plate

1	With base plate prepare for driver seat KFS 4
2	With base plate prepare for driver seat KFS 2
3	With base plate with apron for driver seat KFS 9, KFS 11...
4	Without base plate

Driver seat

KFS 4*	*(included in the delivery!)*
KFS 2*	
KFS 11*	
KFS 9*	
Description see driver seat page 186	

Mounting for equipment boxes

V...	Multi-axis controller *(see page 1)*
S...	Single-axis controller *(see page 65)*
D...	Double-handle controller *(see page 45)*
N...	Control-switch *(see page 101)*
...	*More command and indicating devices (see page 162)*

3

Technical details may vary based on configuration or application! Technical data subject to change without notice!

V2015/1 10.02.2015

Crane control unit
KST 7

KST 7 - 1 - M1 - F1 - LK / KFS 11 / V64 / V64.1 / KL / X

Wiring	
KL	Without wiring, but terminal block built each terminal
KLV	On terminal block 4 qmm with single wire 1 qmm each terminal
KLV	On SPS (SPS provision) with single wire 1 qmm each terminal
KLVA	External wiring single wire highly flexible 1,5 qmm 5 m long each terminal

Special model	
X	Special / customer-specific
X[1]	Special painted

3

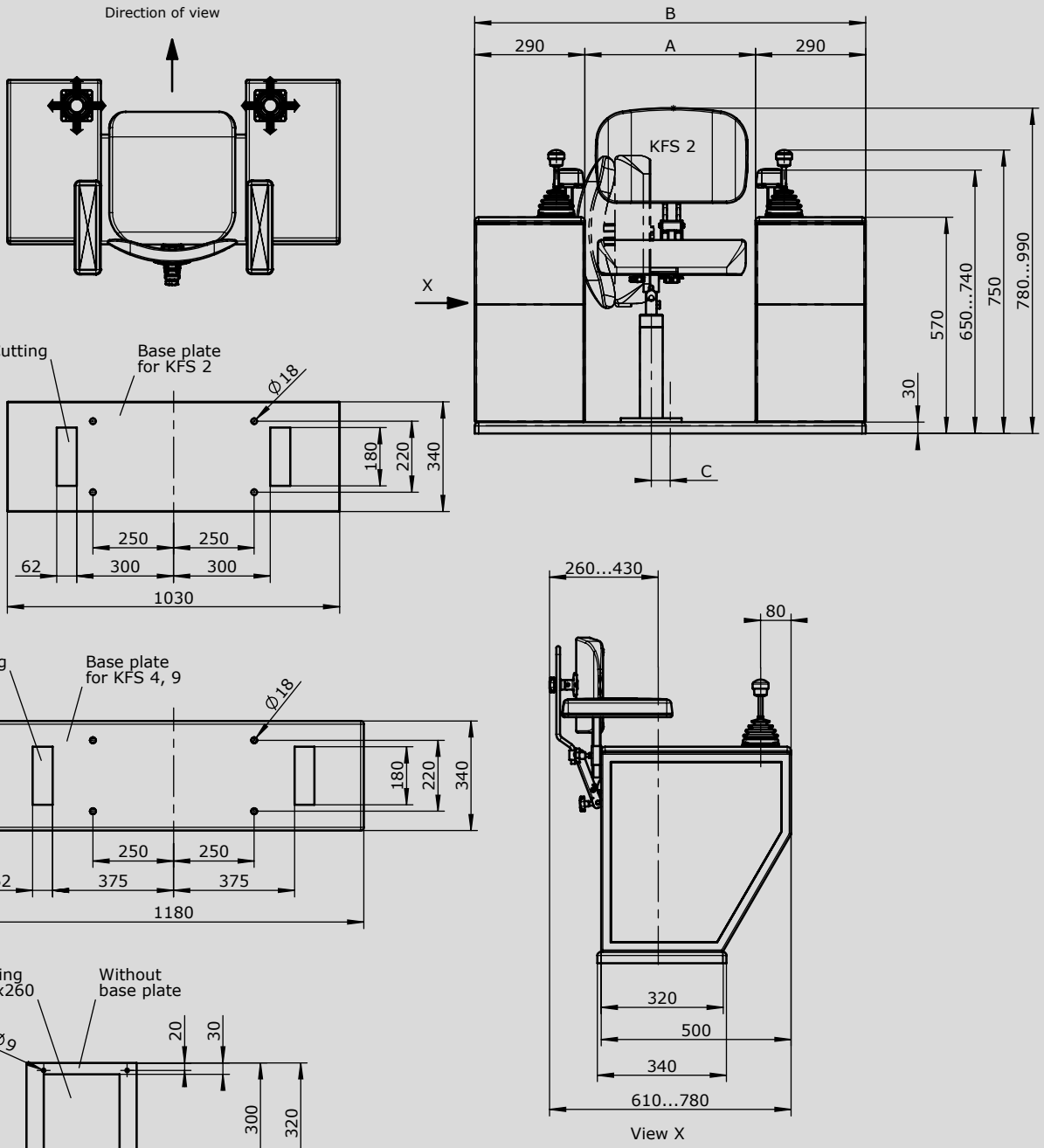

Type	Dim. A	Dim. B	Dim. C
KFS 2	450	1030	50
KFS 4	600	1180	25
KFS 9	600	1180	25

Technical details may vary based on configuration or application! Technical data subject to change without notice!

V2015/1 20.08.2015

Crane control unit
KST 8 swiveling

GESSMANN Industrial Controllers

The KST 8 is an ergonomically designed swiveling crane control chair which provides a high degree of comfort.

Equipment boxes:
The sheet steel equipment boxes are vertically and horizontally adjusted. The arrangement of the joysticks, indicators and control devices is customised according to customer specifications.
Cabling is run through aduct in the cross-member. (Terminal block)
Special boxes available upon request.

Driver seat:
As standard the KST 8 is fitted with a KFS 11 seat. The seat itself is fitted with a hydraulic vibration absorption system complete with weight adjustment to ensure that the comfort level is fitted with armrests and a headrest. There is the option to have the seat covered with air-permeable artificial leather.

Cross member with swivel base:
The cover of the sheet steel cross-member including the driver's seat is forward foldable.
Thereby all wirings, terminals and bushings are easily accessible during commissioning and maintenance.
Swivel base has zero-clearance bearing and can be locked by a friction brake.

Surface treatment:
Base coat and textured varnish
Standard colour RAL 9011 black

Example

KST 8	- 3	- M1	- F1	- LK	/	KFS 11	/	V64	/	V64.1	/	KL	/	X

Basic unit

KST 8	With equipment boxes

Base unit

1	Swiveling 180° left, 90° right with friction brake
2	Electric swiveling 180° left, 90° right
3	Not swiveling
4	Without base frame

Attachment

M1	Monitor mounting with monitor housing
M2	Monitor mounting with monitor mounting braket
M3	Monitor mounting without monitor housing/-mounting braket
F1	Footrest KBF/433
H	Heater 2x2kW with ventilator
LK	Plate for horizontal manual adjustment of control units +/- 250 mm

Driver seat

KFS 11*	*(included in the delivery!)*
KFS 9*	
KFS 10*	
KFS 12*	

**Description see driver seat page 186*

3

Technical details may vary based on configuration or application! Technical data subject to change without notice!

Crane control unit
KST 8 swiveling

KST 8 - 3 - M1 - F1 - LK / KFS 11 / V64 / V64.1 / KL / X

Mounting for equipment boxes

V...	Multi-axis controller *(see page 1)*
S...	Single-axis controller *(see page 65)*
D...	Double-handle controller *(see page 45)*
N...	Control-switch *(see page 101)*
...	*More command and indicating devices (see page 162)*

Wiring

KL	Without wiring, but terminal block built each terminal
KLV	On terminal block 4 qmm with single wire 1 qmm each terminal
KLV	On SPS (SPS provision) with single wire 1 qmm each terminal
KLVA	External wiring single wire highly flexible 1,5 qmm 5 m long each terminal

Special model

X	Special / customer-specific
X[1]	Special painted

3

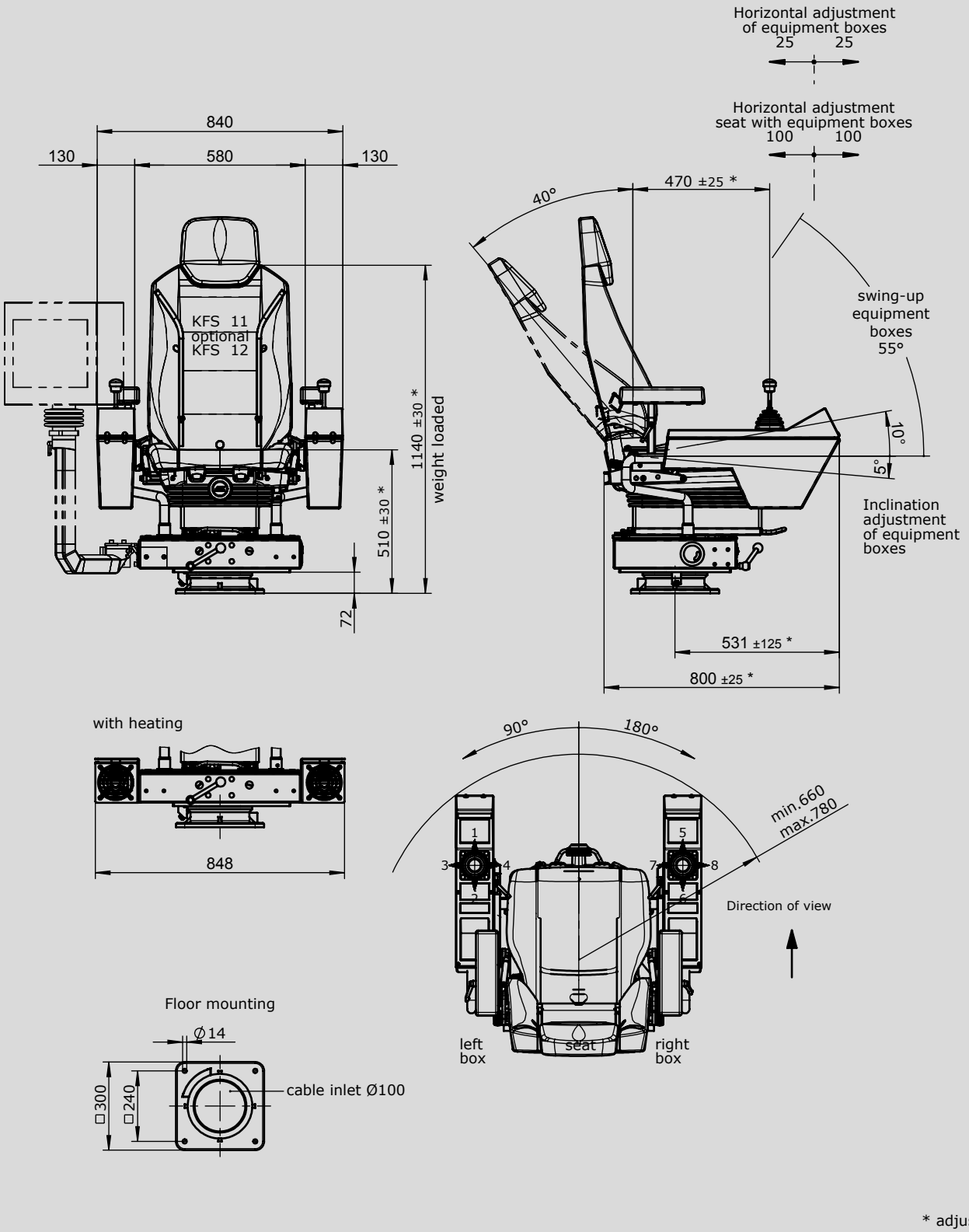
Horizontal adjustment
of equipment boxes
25 25
Horizontal adjustment
seat with equipment boxes
100 100
840
130
580
130
KFS 11
optional
KFS 12
1140 ±30 *
weight loaded
510 ±30 *
72
40°
470 ±25 *
swing-up
equipment
boxes
55°
10°
5°
Inclination
adjustment
of equipment
boxes
531 ±125 *
800 ±25 *
with heating
848
90°
180°
min.660
max.780
1
3
4
5
7
8
2
6
Direction of view
left
box
seat
right
box
Floor mounting
Ø14
□300
□240
cable inlet Ø100

* adjustable

Crane control unit
KST 85

GESSMANN Industrial Controllers

The KST 85 is an ergonomically designed swiveling crane control chair which provides a high degree of comfort.

Equipment boxes:
The sheet steel equipment boxes are vertically and horizontally adjusted. The arrangement of the joysticks, indicators and control devices is customised according to customer specifications.
Cabling is run through aduct in the cross-member. (Terminal block)
Special boxes available upon request.

Driver seat:
The comfortable spring mounted seat KFS 85 with roller-bearing swivel systems.

Heating console:
Cover with 2 steps heating (2x2 kW 400V AC) with integrated ventilator. The cover of the heating cover can be tilted forward to reach the terminal block of the heating and cable execution.

Surface treatment:
Base coat and textured varnish
Standard colour RAL 9011 black

Example

KST 85	- M1	/	KFS 82	/	V64	/	V64.1	/	KL	/	X

Basic unit

KST 85	With heating in the apron
KST 87	With apron without heating

Attachment

M1	Monitor mounting with monitor housing
M2	Monitor mounting with monitor mounting braket
M3	Monitor mounting without monitor housing/-mounting braket

Driver seat

KFS 82*	*(included in the delivery!)*

Mounting for equipment boxes

V...	Multi-axis controller *(see page 1)*
S...	Single-axis controller *(see page 65)*
D...	Double-handle controller *(see page 45)*
N...	Control-switch *(see page 101)*
....	*More command and indicating devices (see page 162)*

Wiring

KL	Without wiring, but with terminal block built each terminal
KLV	On terminal block 4 qmm with single wire 1 qmm each terminal
KLV	On SPS (SPS provision) with single wire 1 qmm each terminal
KLVA	External wiring single wire highly flexible 1,5 mm 5 m long each terminal

Special model

X	Special / customer-specific
X¹	Special painted

Technical details may vary based on configuration or application! Technical data subject to change without notice!

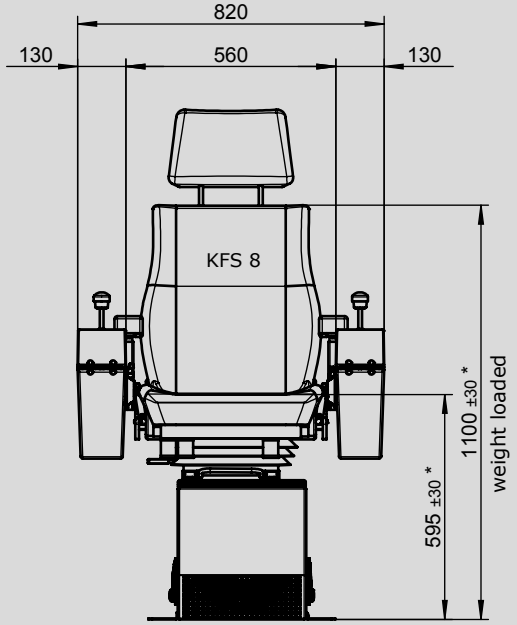

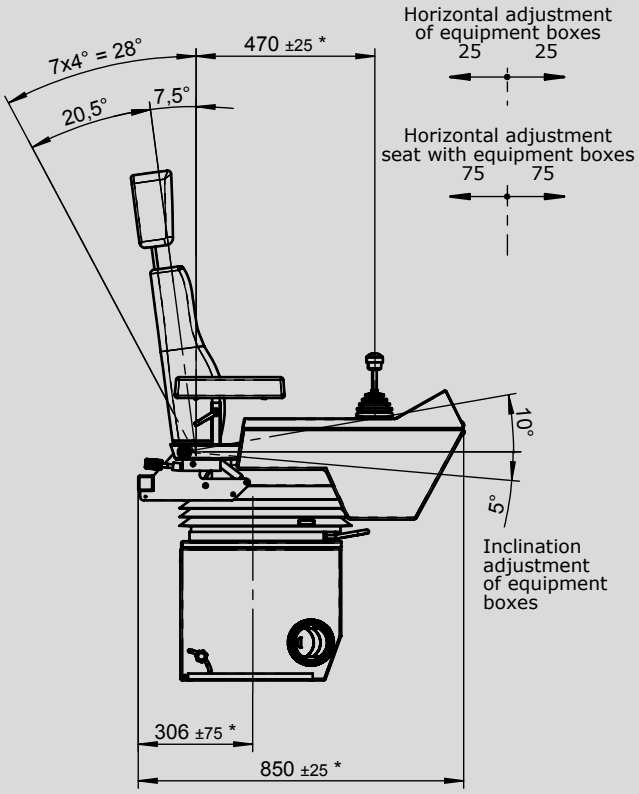

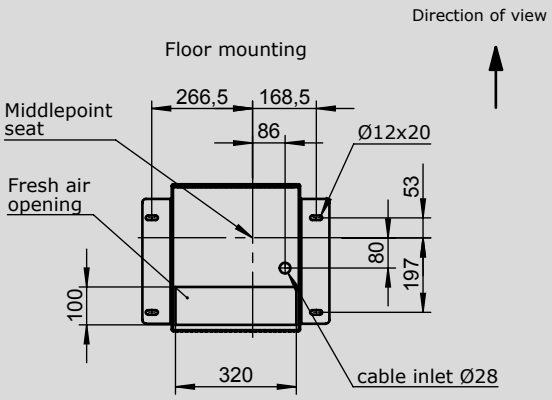

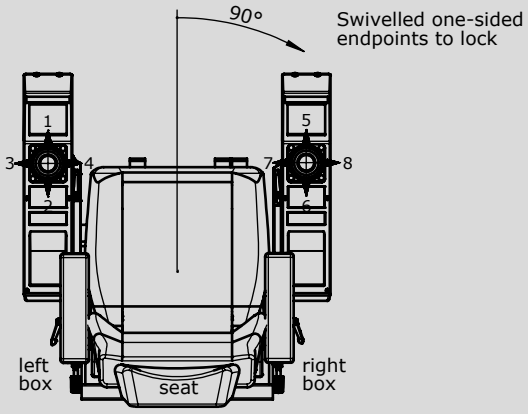

* adjustable

3

Crane control unit
KST 10 swiveling

GESSMANN Industrial Controllers

The KST 10 is an ergonomically designed swiveling crane control chair which provides a high degree of comfort.

Equipment boxes:
The sheet steel equipment boxes are vertically and horizontally adjusted. The arrangement of the joysticks, indicators and control devices is customised according to customer specifications.
Cabling is run through aduct in the cross-member. (Terminal block)
Special boxes available upon request.

Driver seat:
As standard the KST 10 is fitted with a KFS 11 seat. The seat itself is fitted with a hydraulic vibration absorption system complete with weight adjustment to ensure that the comfort level is fitted with armrests and a headrest. There is the option to have the seat covered with air-permeable artificial leather.

Cross-member with swivel base:
The cover of the sheet steel cross-member including the driver's seat is forward foldable.
Thereby all wirings, terminals and bushings are easily accessible during commissioning and maintenance.
Swivel base has zero-clearance bearing and can be locked by a friction brake.

Surface treatment:
Base coat and textured varnish
Standard colour RAL 9011 black

Example

KST 10	- 3	- M1	- F1	- LK	/	KFS 11	/	V85	/	V85.1	/	KL	/	X

Basic unit

KST 10	With equipment boxes

Base unit

1	Swiveling 180° left, 90° right with friction brake
2	Electric swiveling 180° left, 90° right
3	Not swiveling
4	Without base frame

Attachment

M1	Monitor mounting with monitor housing
M2	Monitor mounting with monitor mounting braket
M3	Monitor mounting without monitor housing/-mounting braket
F1	Footrest KBF/433
H	Heater 2x2 kW with ventilator
LK	Plate for horizontal manual adjustment of control units +/- 250 mm

Driver seat

KFS 11*	*(included in the delivery!)*
KFS 9*	
KFS 10*	
KFS 12*	

**Description see driver seat page 186*

3

Technical details may vary based on configuration or application! Technical data subject to change without notice!

V2015/1 10.02.2015

Crane control unit
KST 10 swiveling

KST 10 - 3 - M1 - F1 - LK / KFS 11 / V64 / V64.1 / KL / X

Mounting for equipment boxes

V...	Multi-axis controller *(see page 1)*
S...	Single-axis controller *(see page 65)*
D...	Double-handle controller *(see page 45)*
N...	Control-switch *(see page 101)*
...	*More command and indicating devices (see page 162)*

Wiring

KL	Without wiring, but terminal block built in each terminal
KLV	On terminal block 4 qmm with single wire 1 qmm each terminal
KLV	On SPS (SPS provision) with single wire 1 qmm each terminal
KLVA	External wiring single wire highly flexible 1,5 qmm 5 m long each terminal

Special model

X	Special / customer-specific
X[1]	Special painted

3

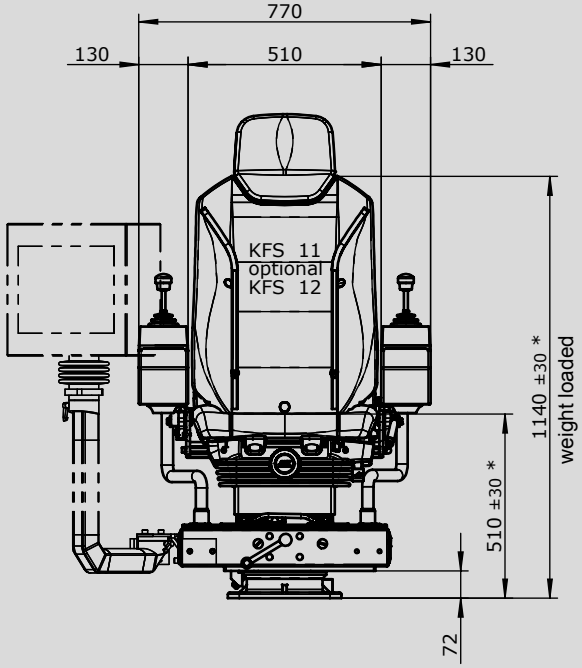

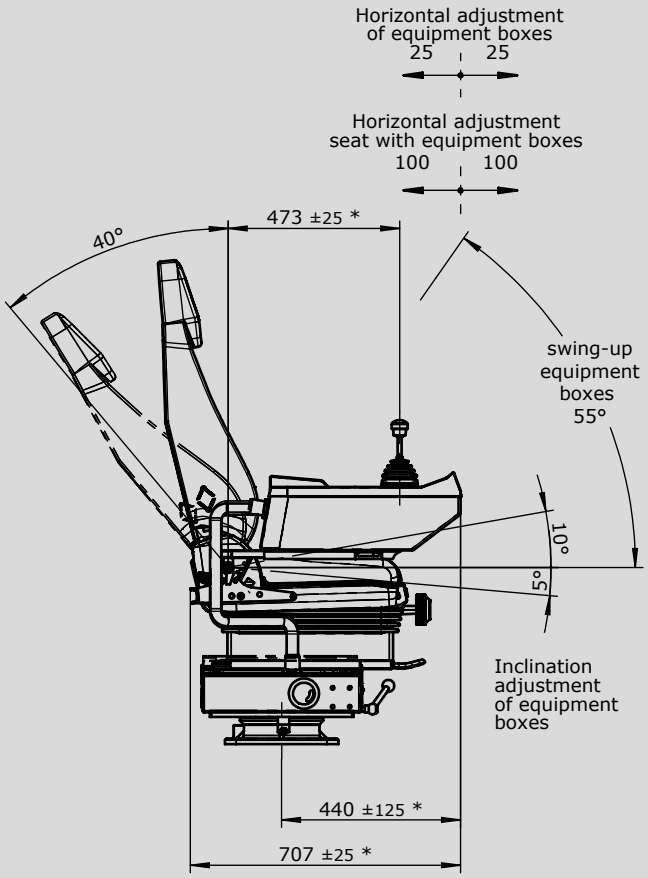

with heating

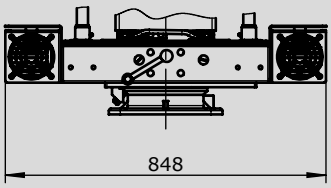

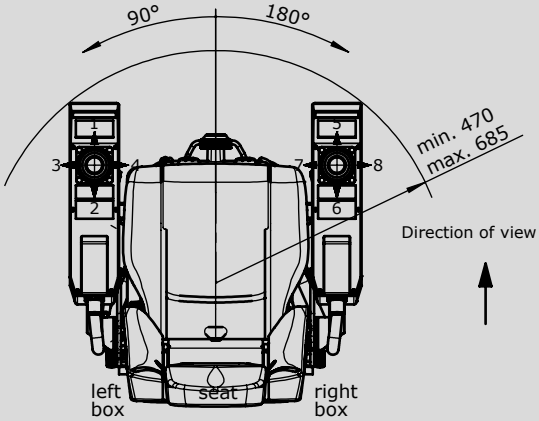

Floor mounting

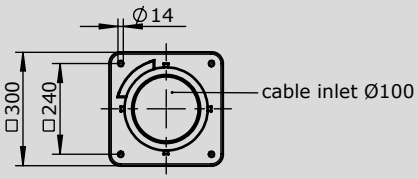

* adjustable

Technical details may vary based on configuration or application! Technical data subject to change without notice!

V2015/1 20.08.2015

Crane control unit
KST 19 swiveling

The KST 19 is an ergonomically designed swiveling crane control chair which provides a high degree of comfort.

Equipment boxes:
The sheet steel equipment boxes are vertically and horizontally adjusted. The arrangement of the joysticks, indicators and control devices is customised according to customer specifications.
Cabling is run through aduct in the cross-member. (Terminal block)
Special boxes available upon request.

Driver seat:
As standard the KST 19 is fitted with a KFS 10 seat. The seat itself is fitted with a hydraulic vibration absorption system complete with weight adjustment to ensure that the comfort level is fitted with armrests and a headrest. There is the option to have the seat covered with air-permeable artificial leather.

Cross-member with swivel base:
The cover of the sheet steel cross-member including the driver's seat is forward foldable.
Thereby all wirings, terminals and bushings are easily accessible during commissioning and maintenance.
Swivel base has zero-clearance bearing and can be locked by a friction brake.

Surface treatment:
Base coat and textured varnish
Standard colour RAL 7032 pepple-grey

Example

KST 19	- 3	- M1	- F1	- LK	/	KFS 10	/	V64	/	V64.1	/	KL	/	X

Basic unit

KST 19	With equipment boxes

Base unit

1	Swiveling 180° left, 90° right with friction brake
2	Not swiveling
3	Without base frame

Attachment

M1	Monitor mounting with monitor housing
M2	Monitor mounting with monitor mounting braket
M3	Monitor mounting without monitor housing/ -mounting braket
M4	Monitor mounting (< 5kg) with monitor housing
M5	Monitor mounting (< 5kg) with mounting adapter
F1	Footrest mounted dispatch 1 KBF/435
H	Heater 2x2kW with ventilator
LK	Plate for horizontal manual adjustment for control units +/- 250 mm

Driver seat

KFS 10*	*(included in the delivery!)*

**Description see driver seat page 194*

3

Technical details may vary based on configuration or application! Technical data subject to change without notice!

Crane control unit
KST 19 swiveling

KST15 - 3 - M1 - F1 - LK / KFS10 / V64 / V64.1 / KL / X

Mounting for equipment boxes

V...	Multi-axis controller *(see page 1)*
S...	Single-axis controller *(see page 65)*
D...	Double-handle controller *(see page 45)*
N...	Control-switch *(see page 101)*
...	*More command and indicating devices (see page 162)*

Wiring

KL	Without wiring, but terminal block built in each terminal
KLV	On terminal block 4 qmm with single wire 1 qmm each terminal
KLV	On SPS (SPS provision) with single wire 1 qmm each terminal
KLVA	External wiring single wire highly flexible 1,5 qmm 5 m long each terminal

Special model

X	Special / customer-specific
X¹	Special painted

3

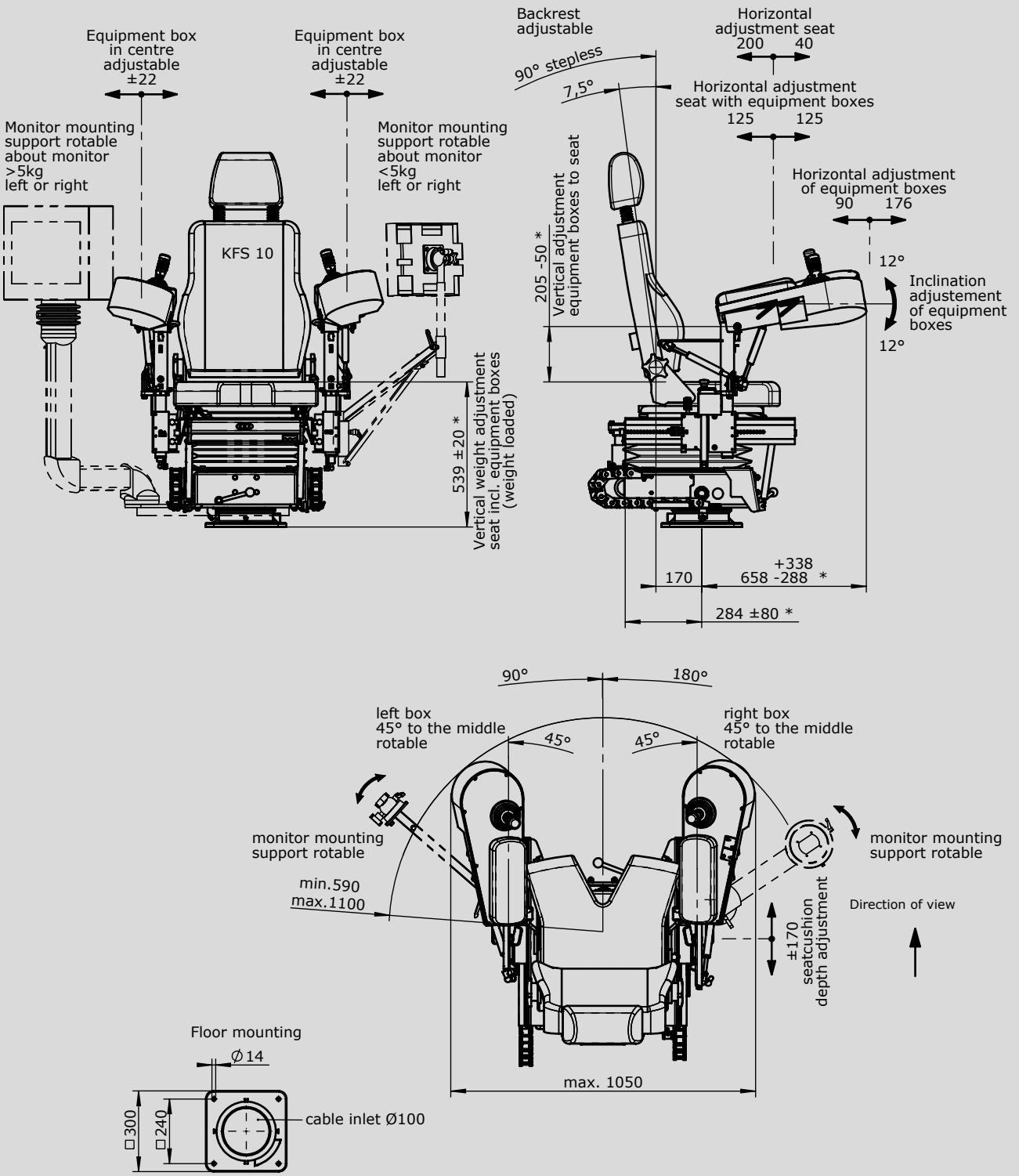

* adjustable

3

Technical details may vary based on configuration or application! Technical data subject to change without notice!

Driver seat
KFS 2

The crane driver`s seat KFS 2 has stepless high adjustment by means of a gas-loaded spring. The backrest can be tilted, forwards onto the cushion, which in turn can then be tilted 90° sideways. All these functions are performed easily via levers.

Example

Technical data:

Horizontal adjustment	100 mm
Inclination of the backrest	max. 10°
Height adjustment	120 mm

	KFS 22
Driver seat	
KFS 21 with air-permeable artificial leather cover black	
KFS 22 with textil cover grey / black	

3

Technical details may vary based on configuration or application! Technical data subject to change without notice!

V2015/1 10.02.2015

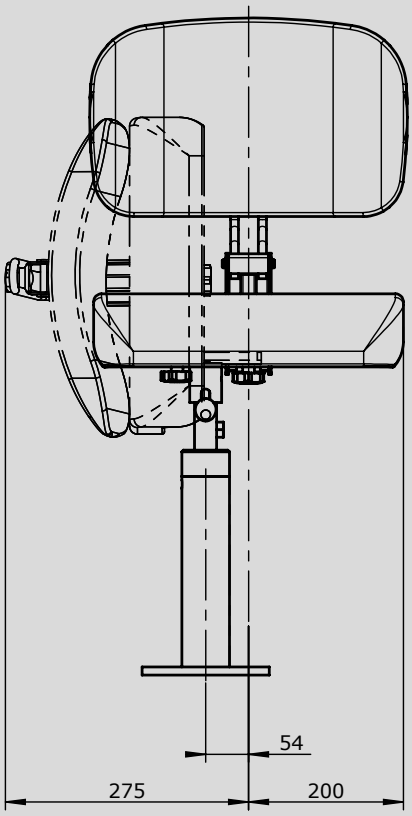

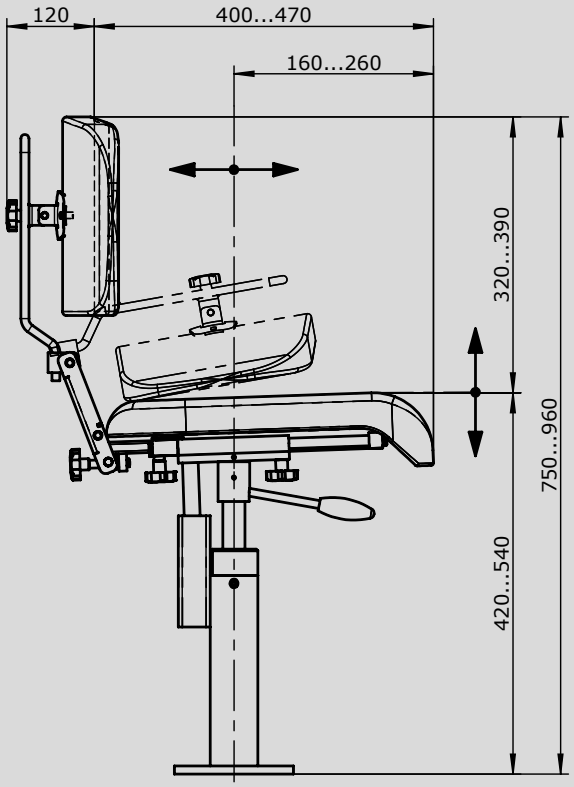

Floor mounting

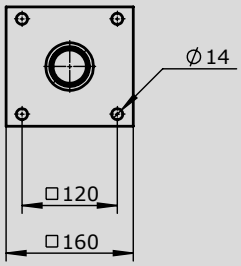

Technical details may vary based on configuration or application! Technical data subject to change without notice!

Driver seat
KFS 4

The crane driver`s seat KFS 4 has stepless high adjustment by means of a gas-loaded spring and an oilhydraulic vibration absorption system with weight adjustment.
The backrest can be tilted, forwards into the cushion, which in turn can then be tilted 90° sideways.
All functions are performed by a simple lever operation.
The metal parts are protected against corrosion and painted black.

Example

Technical data:

Suspension stoke	80 mm
Weight adjustment	50 - 130 kg
Horizontal adjustment	100 mm
Inclination of the backrest	max. 20°
Height adjustment	100 mm

		KFS 42	- A1
Driver seat			
KFS 41	Driver seat with air-permeable artificial leather cover black		
KFS 42	Driver seat with textil cover grey / black		
Attachment			
A1	Armrest fully adjustable (2 pieces) 50 mm wide		
A2	Armrest fully adjustable (2 pieces) 100 mm wide		

3

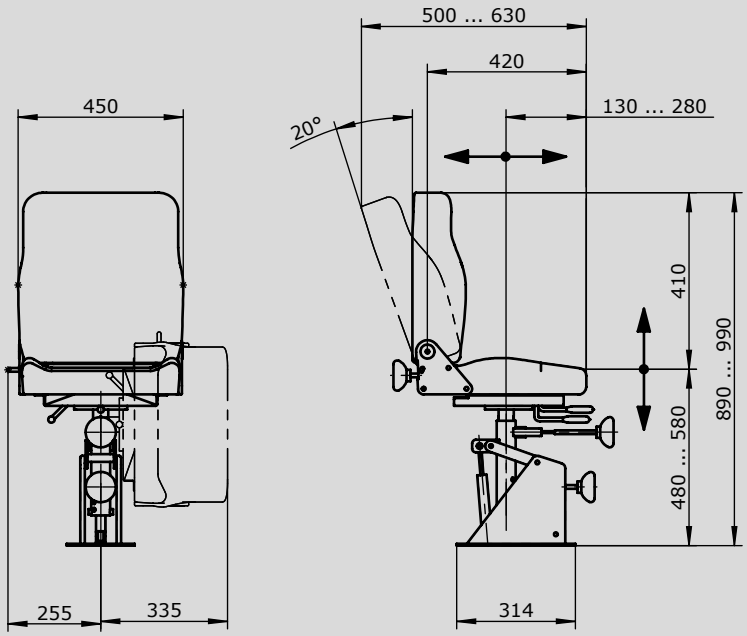

Floor mounting

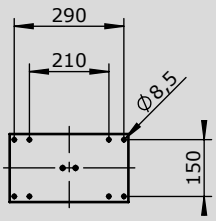

3

Technical details may vary based on configuration or application! Technical data subject to change without notice!

Driver seat
KFS 8

The crane driver`s seat KFS 8 is a static seat with ergonomically designed and provides a high grade of comfort.
The driver`s seat is equipped with roller-bearing swivel system.
All adjustment controls are positioned ergonomically within easy access.
The metal parts are protected against corrosion and painted black.

Example

Technical data:

Horizontal adjustment	150 mm
Inclination of the backrest	max. 28°
Height adjustment	65 mm

	KFS 82	- A1	- S1	- U
Driver seat				
KFS 82 Driver seat with textil cover grey / black				
Attachment				
K Headrest				
A1 Armrest fully adjustable (2 pieces) 50 mm wide				
A2 Armrest fully adjustable (2 pieces) 100 mm wide				
S1 Safety belt 2-point mounting				
U Base frame (Apron)				

3

Technical details may vary based on configuration or application! Technical data subject to change without notice!

V2015/1 10.02.2015

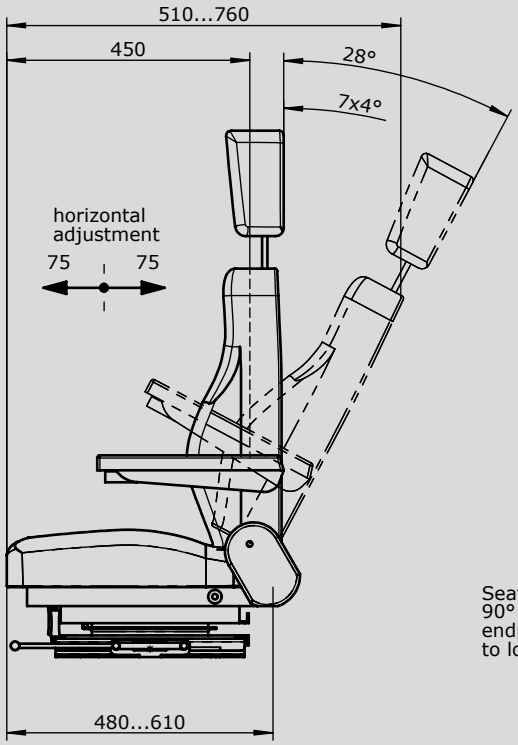

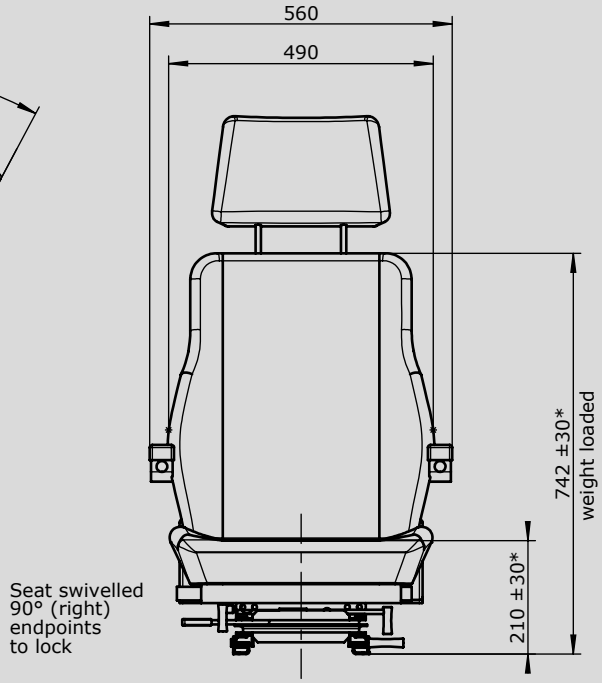

Mounting dimensions
of the seat rails

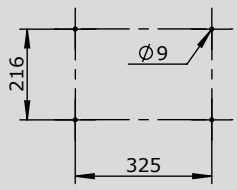

* adjustable

3

Driver seat
KFS 9

GESSMANN Industrial Controllers

The crane driver`s seat KFS 9 is ergonomically designed and provides a high grade of comfort.
The driver`s seat is a low level mechanical suspension seat with an oilhydraulic vibration absorption system with weight adjustment.
Upon request, a pneumatic vibrating system with weight adjustment is available.
All adjustment controls are positioned ergonomically within easy access.
The metal parts are protected against corrosion and painted black.

Technical data:

Suspension stoke	80 mm
Weight adjustment	50 - 150 kg (pneumatic) 50 - 130 kg (mechanical)
Horizontal adjustment	160 mm
Inclination of the backrest	max. 90°
Height and slope adjustment	60 mm

Example

	KFS 92	- A1	- L2	- S1	- P
Driver seat					
KFS 91	Driver seat with air-permeable artificial leather cover black				
KFS 92	Driver seat with textil cover grey / black				
Attachment					
K	Headrest rain				
A1	Armrest adjustable (2 pieces) 50 mm wide				
A2	Armrest continuously adjustable (2 pieces) 100 mm wide				
L1	Lumbar support manual adjustment - 2 movement				
L2	Lumbar support manual adjustment - 4 movement				
B	Seat allocation recognition				
H	Seat cushion and backrest standard with heating element 24V DC 47W				
S1	Safety belt 2 point fixing				
S2	Safety belt 4 point fixing (headrest raint required)				
P	Pneumatic vibration absorption system with weight adjustment (incl. compressor)				
LK	Plate for horizontal manual adjustment of seat adjustable +/-250 mm				
C	Loose cover				
U	Console (base)				

Technical details may vary based on configuration or application! Technical data subject to change without notice!

V2015/1 10.02.2015

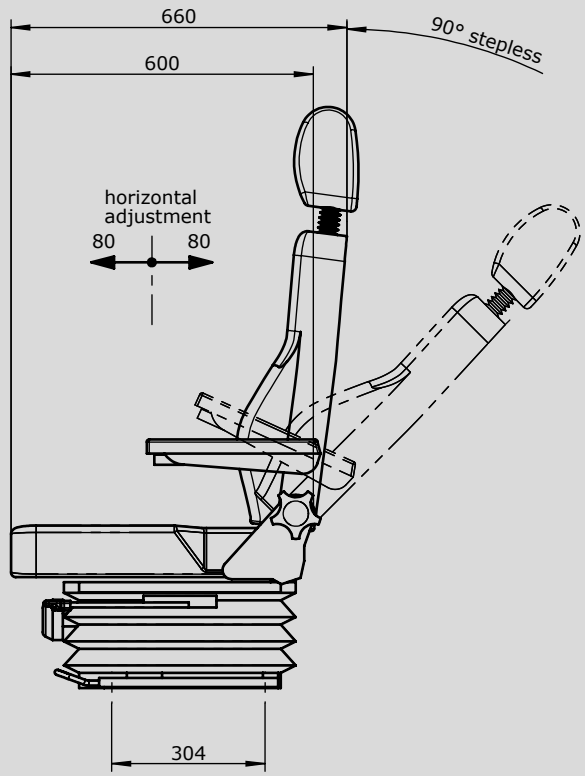

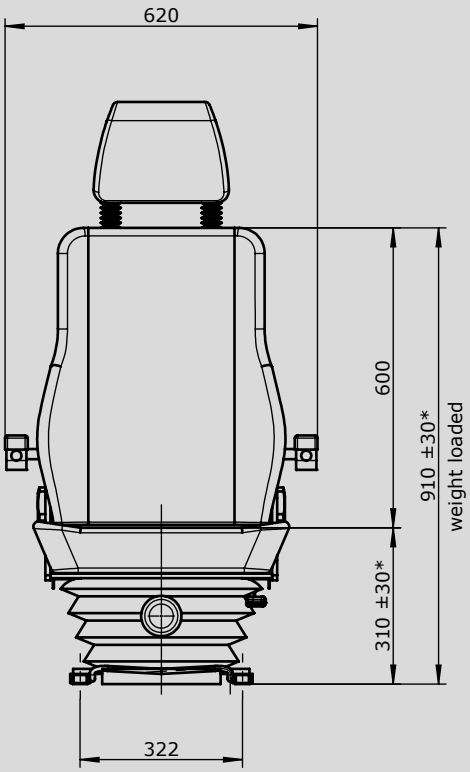

Mounting dimensions
of the seal rails

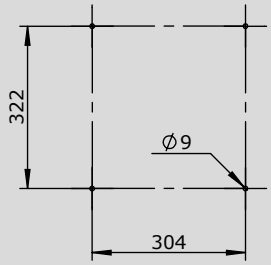

Seat cushion
v-cutout

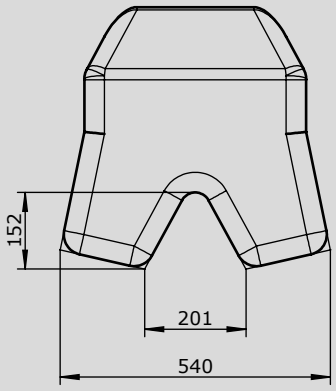

* adjustable

3

Technical details may vary based on configuration or application! Technical data subject to change without notice!

Driver seat
KFS 10

GESSMANN Industrial Controllers

The crane driver`s seat KFS 10 is ergonomically designed and provides a high grade of comfort.
The driver`s seat has a pneumatic vibration absorption system with weight adjustment by compressor (24 V DC 8 Ampere) and a standard seat cushion V-cut.
Through its three horizontal adjustment, it can be flexibly adapted to very many applications.
All adjustment controls are positioned ergonomically within easy access.
The metal parts are protected against corrosion and painted black.

Technical data:

Suspension stoke	80 mm
Weight adjustment	50 - 150 kg (pneumatic)
	50 - 130 kg (mechanical)
Horizontal adjustment	
Seat with suspension system	160 mm
Seat part individuell	240 mm
Seat cushion	160 mm
Inclination of the backrest	max. 90°
Height and slope adjustment	60 mm

Example

	KFS 102	- A1	- L2	- S2	- R1
Driver seat					
KFS 101 Driver seat with air-permeable artificial leather cover black					
KFS 102 Driver seat with textil cover grey / black					
Attachment					
K Headrest raint					
A1 Armrest adjustable (2 pieces) 50 mm wide					
A2 Armrest continuously adjustable (2 pieces) 100 mm wide					
L1 Lumbar support manual adjustment - 2 movement					
L2 Lumbar support manual adjustment - 4 movement					
B Seat allocation recognition					
H Seat cushion and backrest with heating element 24VDC 47W					
S1 Safety belt 2 point fixing					
S2 Safety belt 4 point fixing (headrest raint required)					
U Console (base)					
R1 Price reduction pneumatic vibration absorption system					
R2 Price reduction for seat cushion without V-cut					

Technical details may vary based on configuration or application! Technical data subject to change without notice!

V2015/1 10.02.2015

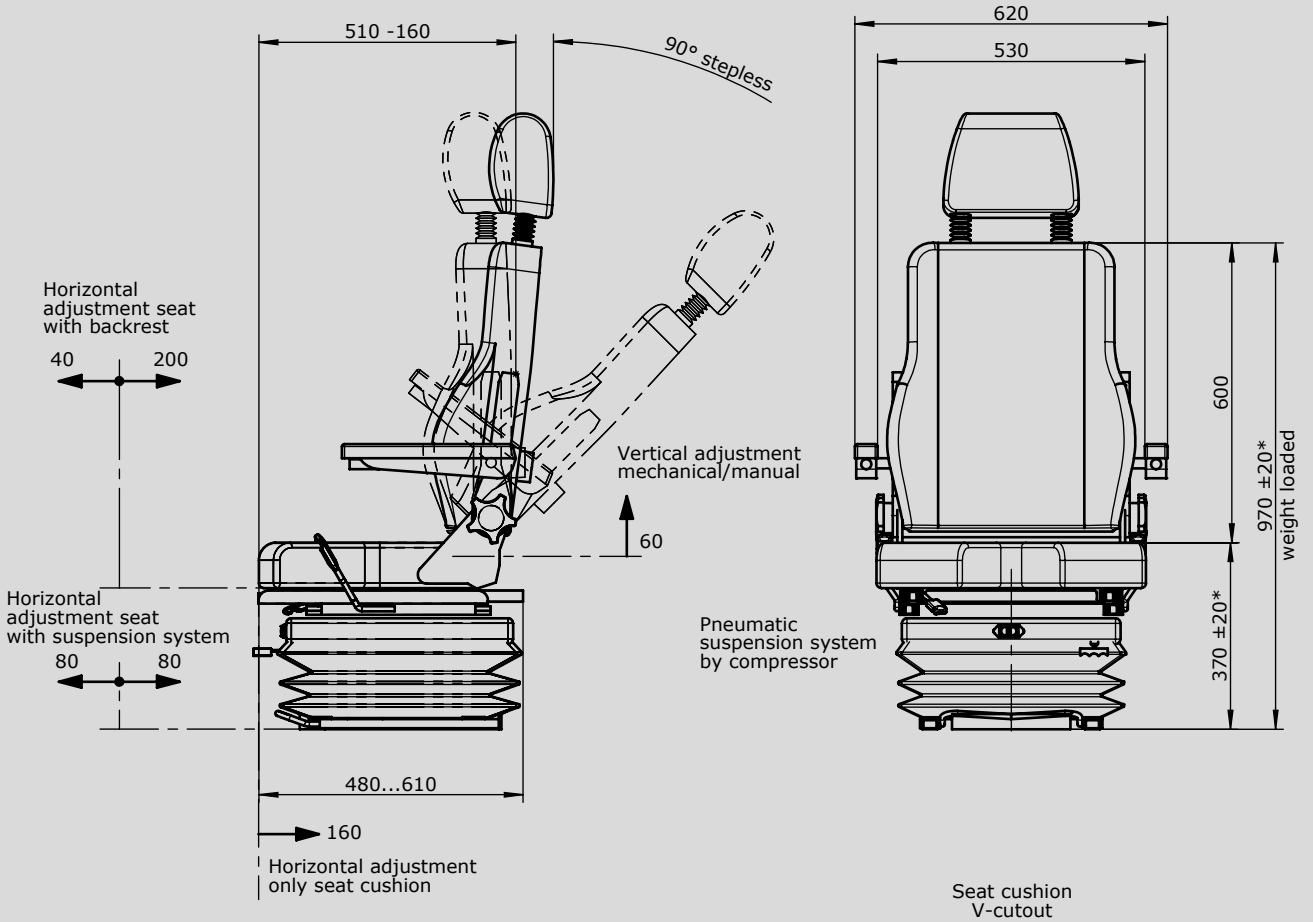

Mounting dimensions seat

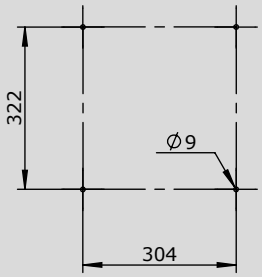

Seat cushion
V-cutout

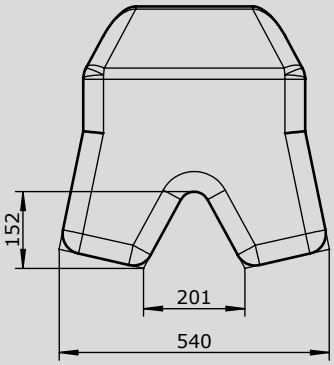

* adjustable

Driver seat
KFS 11

The crane driver`s seat KFS 11 is ergonomically designed and provides a high grade of comfort.
The driver`s seat is a low level mechanical suspension seat with an oilhydraulic vibration absorption system with weight adjustment.
All adjustment controls are positioned ergonomically within easy access.
The metal parts are protected against corrosion and painted black.

Example

Technical data:

Suspension stoke	80 mm
Weight adjustment	50 - 150 kg
Horizontal adjustment	230 mm
Inclination of the backrest	-12°/+40°
Slope adjustment	-10°/+12°
Height adjustment	65 mm

		KFS 11	- A1	- S1
Driver seat				
KFS 11	Driver seat with textil cover grey / black			
Attachment				
K	Headrest raint			
A1	Armrest adjustable (2 pieces) 50 mm wide			
A2	Armrest continuously adjustable (2 pieces) 100 mm wide			
H	Seat cushion and backrest with heating element 24VDC 47W			
S1	Safety belt 2 point fixing			
LK	Plate for horizontal manual adjustment of seat adjustable +/-250 mm			
C	Loose cover			
U	Console (base)			

3

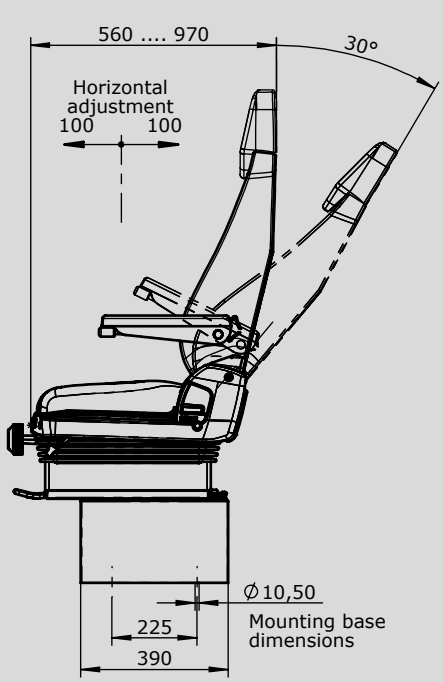

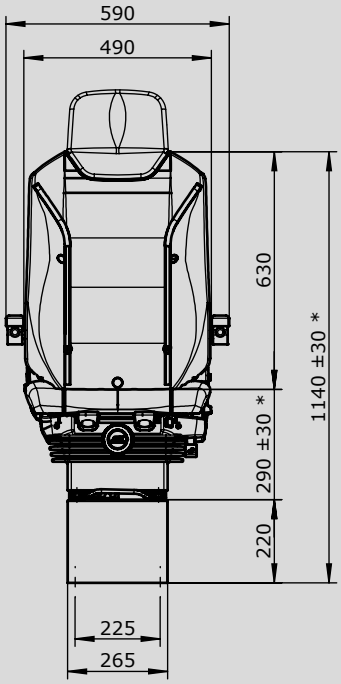

Special equipment

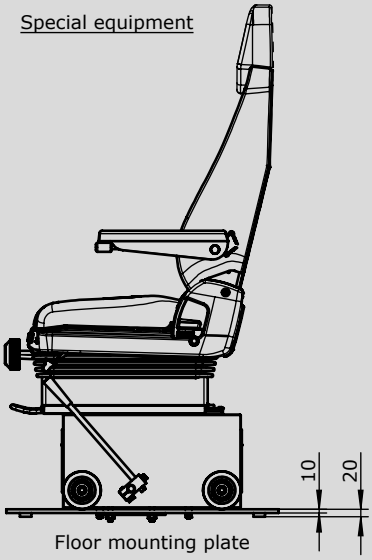

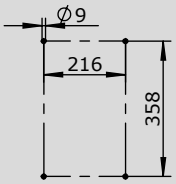

Mounting dimensions of the seat rails

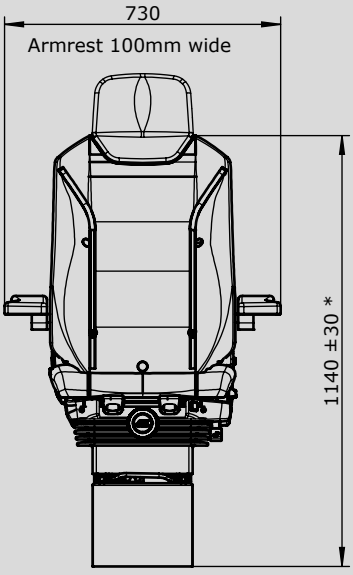

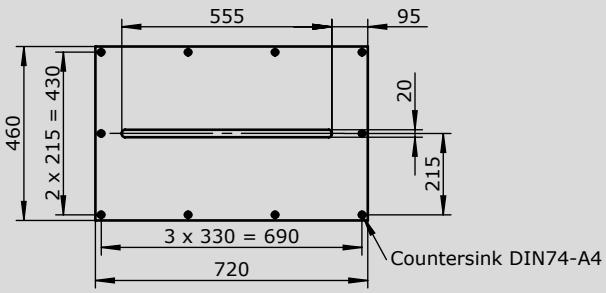

* adjustable

3

Technical details may vary based on configuration or application! Technical data subject to change without notice!

Driver seat
KFS 12

The crane driver`s seat KFS 12 is ergonomically designed and provides a high grade of comfort.
The driver's seat is equipped with an air-sprung vibration system.
The weight adjustment is infinitely.
Heated seats 24V, lumbar support, seat cushion adjustment, seat allocation recognition and headrest raint are included in the standard delivery.
All adjustment controls are positioned ergonomically within easy access.
The metal parts are protected against corrosion and painted black.

Technical data:

Suspension stoke	80 mm
Weight adjustment	50 - 150 kg
Horizontal adjustment	230 mm
Inclination of the backrest	-12°/+40°
Slope adjustment	-10°/+12°
Height adjustment	100 mm
Seat cushion adjustment	60 mm

Example

		KFS 12	- A1	- S1
Driver seat				
KFS 12	Driver seat with textil cover grey / black			
Attachment				
A1	Armrest adjustable (2 pieces) 50 mm wide			
A2	Armrest continuously adjustable (2 pieces) 100 mm wide			
S1	Safety belt 2 point fixing			
LK	Plate for horizontal manual adjustment of seat adjustable +/-250 mm			
C	Loose cover			
U	Console (base)			

3

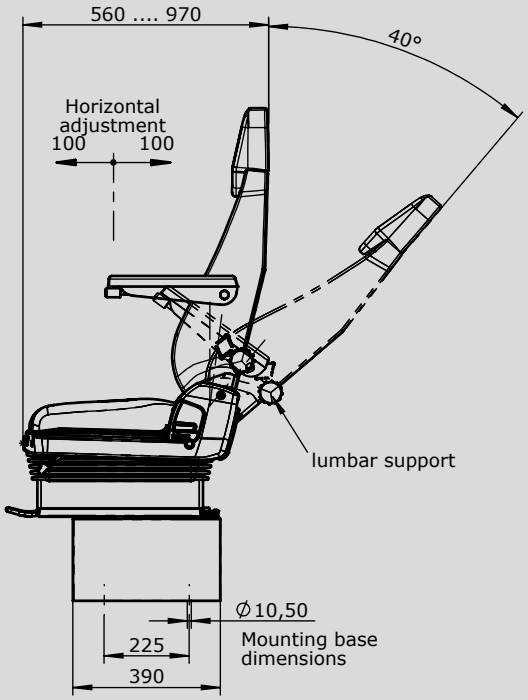

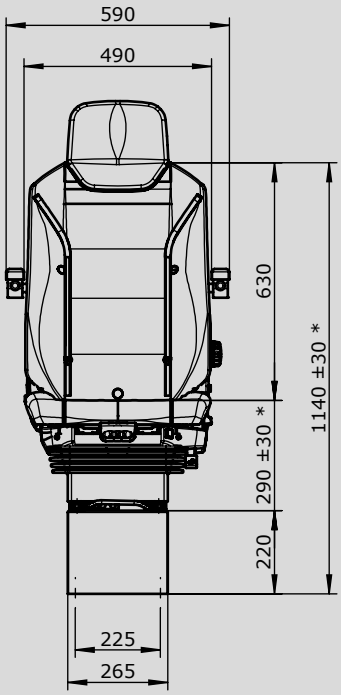

Special equipment

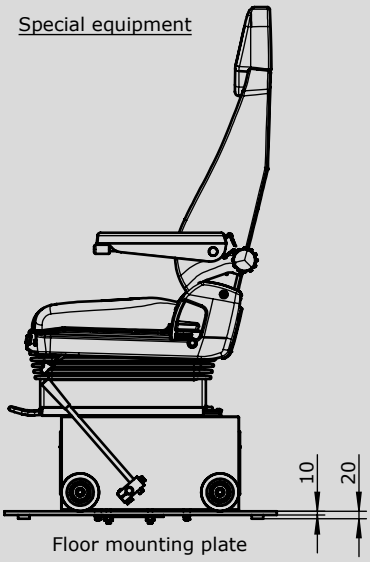

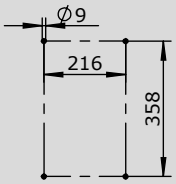

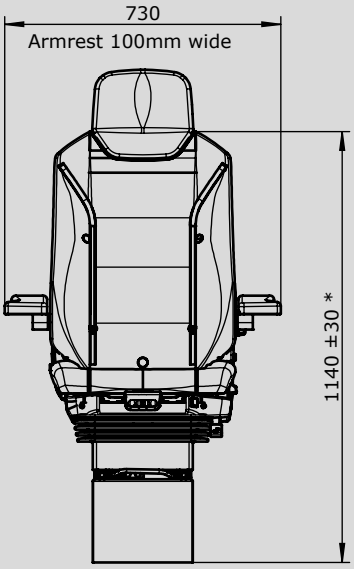

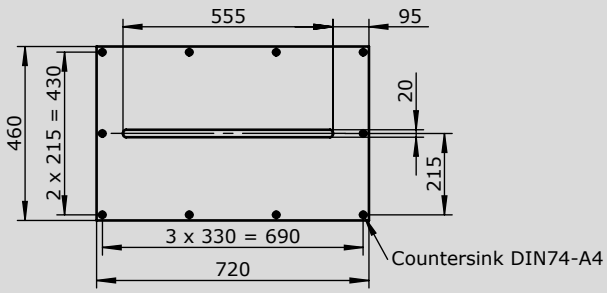

* adjustable

3

Technical details may vary based on configuration or application! Technical data subject to change without notice!

Portable control unit
TS 1

GESSMANN Industrial Controllers

The portable control unit TS 1 is used for controlling and monitoring the necessary equipment.
The chest panel and straps enable the operator to carry it without becoming tired.
An adjustable carrying strap can also be fitted for use without the chest plate.

Surface treatment:
Priming and structur-finishing paint
Standard colour RAL 7032 pepple-grey

Technical data:

Operation temperature	-40°C to +60°C
Degree of protection	IP 54

Example

TS 1	- SB 1	- RH 1	- K 4	- HS 1	/	V...	/	KLS	/	X

Basic unit

TS 1	with chest plate and straps
TS 11	with straps

Attachment

SB 1	Legs for control unit alu-tube 2 pieces	
SB 2	Legs for control unit stainless steel-tube V2 A 2 pieces	
RH 1	Reeling hooks for control unit stainless steel V2 A	
K 1	Cable entry M 32 cable 11-21 mm	
K 2	Cable entry M 40 cable 19-28 mm	
K 3	Cable entry 180° swiveling M 32 cable 11-21 mm	
K 4	Cable entry 180° swiveling M 40 cable 19-28 mm	
HS 1	Plug in socket 16-pole male insert	HAN 16 E without wiring
HB 1	Connector 16-pole female insert	HAN 16 E without wiring
HS 2	Plug in socket 24-pole female insert	HAN 24 E without wiring
HB 2	Connector 24-pole female insert	HAN 24 E without wiring
HS 3	Plug in socket 32-pole male insert	HAN 32 E without wiring
HB 3	Connector 32-pole female insert	HAN 32 E without wiring
Indicating labels not engraved for multi-axis-/ single-axis controller		
Indicating labels engraved for multi-axis-/ single-axis controller		

Mountig for equipment boxes

V	Multi-axis controller *(see page 1)*
S	Single-axis controller *(see page 65)*
N	Control-switch *(see page 101)*
...	*More command and indicating devices (see page 162)*

Cable and wiring

Cable Oelflex	18x1 mm	13,4 mm Ø	-5°C til +80°C	each metre
Cable Oelflex	25x1 mm	15,4 mm Ø	-5°C til +80°C	each metre
Cable Oelflex	34x1 mm	18,6 mm Ø	-5°C til +80°C	each metre
Cable Neonflex	18x1 mm	19,2 mm Ø	-30°C til +80°C	each metre
Cabel Neonflex	24x1 mm	22,1 mm Ø	-30°C til +80°C	each metre
Cabel Neonflex	38x1 mm	26,1 mm Ø	-30°C til +80°C	each metre

KLS	Wired on connector / plug in socket per core
KLK	Wiring for cable per core

Technical details may vary based on configuration or application! Technical data subject to change without notice!

V2015/1 10.02.2015

TS 1	- SB 1	- RH 1	- K 4	- HS 1	/	V...	/	KLS	/	X

Special model	
X	Special / customer-specific
X1	Housing antistatic design < 10^9 Ohm/cm
X2	Finishing colour yellow RAL 1021

Technical details may vary based on configuration or application! Technical data subject to change without notice!

With chest plate and straps
Protection IP 65
with multi-axis controllers IP 54

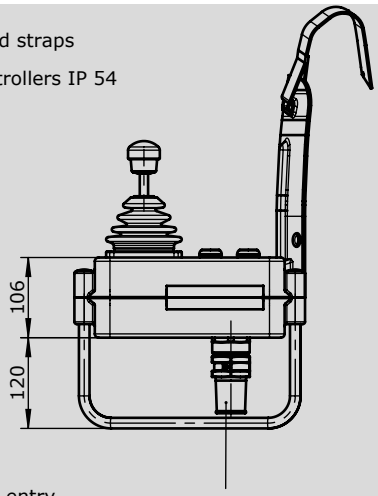

Cable entry
with anti-kink protection
and stain relief or connectors

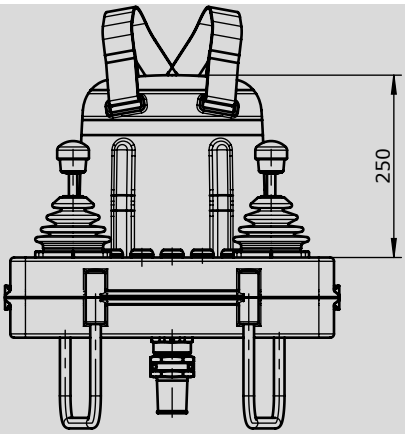

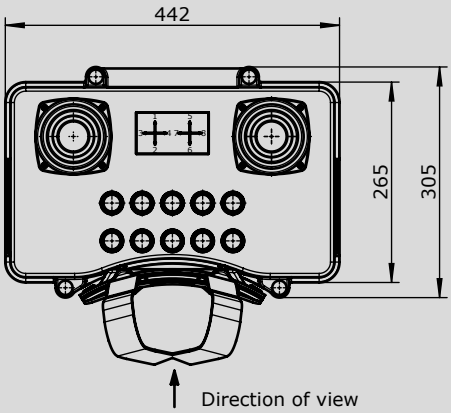

With adjustable carrying strap
Protection IP 65
with multi-axis controllers IP 54

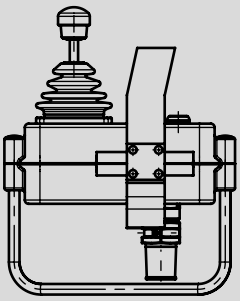

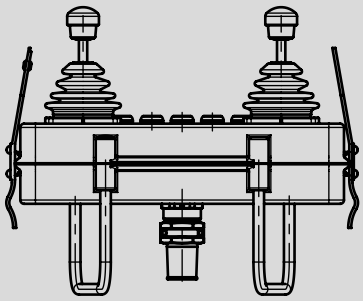

3

Technical details may vary based on configuration or application! Technical data subject to change without notice!

V2015/1 20.08.2015

Portable control unit
TS 2

GESSMANN Industrial Controllers

The portable control unit TS 2 is used for controlling and monitoring the necessary equipment.
The chest panel and straps enable the operator to carry it without becoming tired.
An adjustable carrying strap can also be fitted for use without the chest plate.

Surface treatment:
Priming and structur-finishing paint
Standard colour RAL 7032 pepple-grey

Technical data:

Operation temperature	-40°C to +60°C
Degree of protection	IP 65

Example

TS 2	- SB 1	- RH 1	- K 4	- HS 1	/	V...	/	KLS	/	X

Basic unit

TS 2	with chest plate, straps
TS 21	with straps
TS 22	with bracket and straps

Attachment

SB 1	Legs for control unit alu-tube 2 pieces	
SB 2	Legs for control unit stainless steel-tube V2 A 2 pieces	
RH 1	Reeling hooks for control unit stainless steel V2 A	
K 1	Cable entry M 32 cable 11-21 mm	
K 2	Cable entry M 40 cable 19-28 mm	
K 3	Cable entry 180° swiveling M 32 cable 11-21 mm	
K 4	Cable entry 180° swiveling M 40 cable 19-28 mm	
HS 1	Plug in socket 16-pole male insert	HAN 16 E without wiring
HB 1	Connector 16-pole female insert	HAN 16 E without wiring
HS 2	Plug in socket 24-pole female insert	HAN 24 E without wiring
HB 2	Connector 24-pole female insert	HAN 24 E without wiring
HS 3	Plug in socket 32-pole male insert	HAN 32 E without wiring
HB 3	Connector 32-pole female insert	HAN 32 E without wiring
Indicating labels not engraved for multi-axis-/ single-axis controller		
Indicating labels engraved for multi-axis-/ single-axis controller		

Mountig for equipment boxes

V	Multi-axis controller *(see page 1)*
S	Single-axis controller *(see page 65)*
N	Control-switch *(see page 101)*
...	*More command and indicating devices (see page 162)*

3

Technical details may vary based on configuration or application! Technical data subject to change without notice!

Portable control unit
TS 2

GESSMANN Industrial Controllers

TS 2	- SB 1	- RH 1	- K 4	- HS 1	/	V...	/	KLS	/	X

Cable and wiring				
Cable Oelflex	18x1 mm	13,4 mm Ø	-5°C til +80°C	each metre
Cable Oelflex	25x1 mm	15,4 mm Ø	-5°C til +80°C	each metre
Cable Oelflex	34x1 mm	18,6 mm Ø	-5°C til +80°C	each metre
Cable Neonflex	18x1 mm	19,2 mm Ø	-30°C til +80°C	each metre
Cable Neonflex	24x1 mm	22,1 mm Ø	-30°C til +80°C	each metre
Cable Neonflex	38x1 mm	26,1 mm Ø	-30°C til +80°C	each metre
KLS	Wired on connector / plug in socket per core			
KLK	Wiring for cable per core			

Special model	
X	Special / customer-specific
X1	Housing antistatic design < 10^9 Ohm/cm
X2	Finishing color yellow RAL 1021

3

With chest plate and straps
Protection IP 65
with multi-axis controllers IP 54

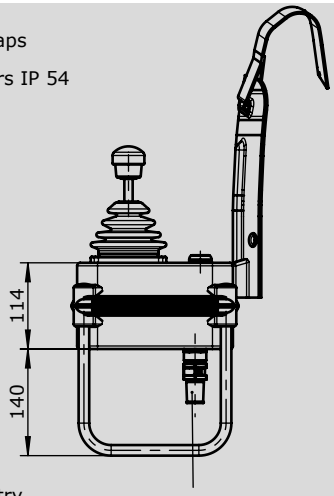

Cable entry
with anti-kink protection
and stain relief or connectors

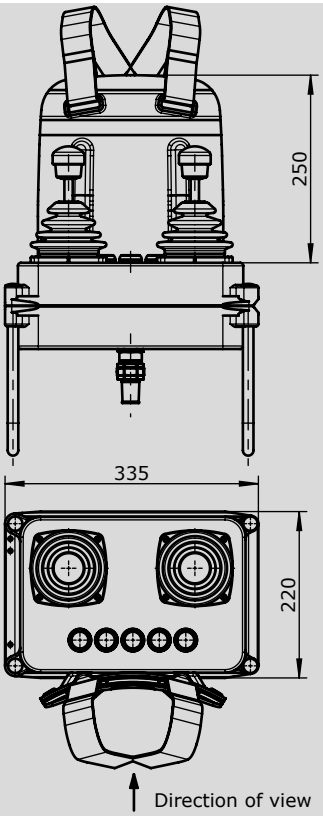

With adjustable carrying strap
Protection IP 65
with multi-axis controllers IP 54

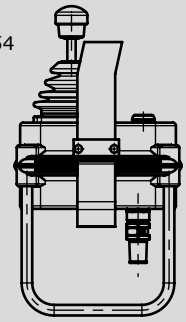

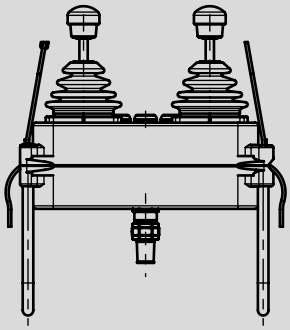

With bracket and cable entry swivelling
Protection IP 65
with multi-axis controllers IP 54

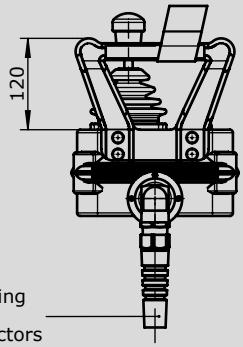

Cable entry 180° swivelling
with anti-kink protection
and stain relief or connectors

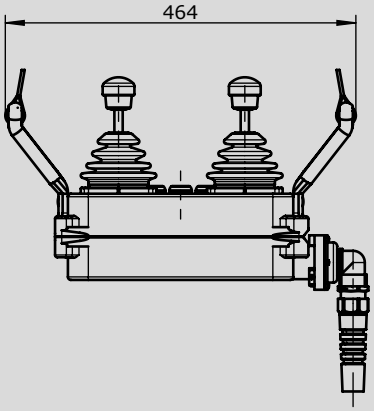

3

Technical details may vary based on configuration or application! Technical data subject to change without notice!

Control pedestal for offshore
U22 / 32

GESSMANN Industrial Controllers

The control pedestal U22 / 32 accomodates the devices necessary for control and monitoring.
Ready wired, it can be quickly and easily installed on the sea deck.
The housing (pedestal head) is made of seawater-resistant aluminium.

Surface treatment:
Priming and structur-finishing paint
Standard colour RAL 7032 pepple-grey

Technical data:

Operation temperature	-40°C til +60°C
Degree of protection	IP 66

Example

U22 / 32	/	N61.../ N62...	/	H / PW / 2D	/	PQ	/	KLV	/	X

Housing

U22/32	With 1 narrow side-plate with pillar-gasket
FD	Side-plate narrow gasket
HD	Side-plate wide gasket (required for command and indicating devices)
KD	Hinged side-plate with gasket that can be locked in position
IA	Monitoring devices cover with gasket for max. 2 monitors 72x72 mm or 4 monitors 72x36 mm and max. 6 indicating devices pos. 28, 29
RS	Pillar 108 mm Ø 670 mm height with flange quadratic or round

Masterswitch / Control-switch

N61	HG Masterswitch with ball handle and indicating labels
N62	KN Control-switch with knob and indicating label

- HG	- 01 Z P	- A05	P134	- X

Axis 1: direction 3-4

(Standard contacts gold-plated 2A 250V AC15)

01	2 contacts	Standard contact - arrangement see page 106	
02	4 contacts	z.B.	
03	6 contacts	A05	MS 21
04	8 contacts	A0500	MS 21-00
		A99 *contact - arrangement according customer request*	

Z	Spring return			
R	Friction brake			
P	Potentiometer	P131	T396 2x0,5 kOhm	I max. 1 mA
		P132	T396 2x1 kOhm	I max. 1 mA
		P133	T396 2x2 kOhm	I max. 1 mA
		P134	T396 2x5 kOhm	I max. 1 mA
		P135	T396 2x10 kOhm	I max. 1 mA
		More potentiometer on request!		

3

Technical details may vary based on configuration or application! Technical data subject to change without notice!

V2015/1 10.02.2015

Control pedestal for offshore
U22 / 32

GESSMANN Industrial Controllers

U22 / 32 / N61.../N62... / H / PW / 2D / PQ / KLV / X

Command and indicating devices

H	Heating	20 Watt 220 or 110 V 50/60 Hz	
PV	Mushroom head push button latching	22 latching with indicating label	1 Ö
P	Mushroom head push button	22 with indicating label	1 S
D	Push button	22 with indicating label	1 S
W	Selector switch 0--1	22 with indicating label	1 S
L	Indicator light	22 with indicating label	Diode 24 Volt
L	Indicator light	22 with indicating label	Diode 230 Volt AC
	Contact block additional		1 S or 1 Ö
L	Indicator light	22 with indicating label	Diode 24 Volt protection IP65
L	Indicator light	10 with indicating label	Diode 24 Volt protection IP65

Display devices

PQ	Powermeter PQ 72 1mA DC	Engraved your instructions
PQI	Powermeter PQ 72 1mA DC illuminated 24 Volt	Engraved your instructions
PQ	Powermeter PQ 72x36 1 mA DC	Engraved your instructions
PQI	Powermeter PQ 72x36 1 mA DC illuminated 24 Volt	Engraved your instructions
EQ	Amperemeter EQ 72 100/200/ 1A	Engraved your instructions
EQI	Amperemeter EQ 72 100/200/ 1A illuminated 24 Volt	Engraved your instructions
EQ	Amperemeter EQ 72x36 100/200/1A	Engraved your instructions
EQI	Amperemeter EQ 72x36 100/200/1A illuminated 24 Volt	Engraved your instructions

Wiring

KLV on terminal block 2,5 qmm with wire line 0,75 qmm

Special model

X Special / customer-specific

3

Technical details may vary based on configuration or application! Technical data subject to change without notice!

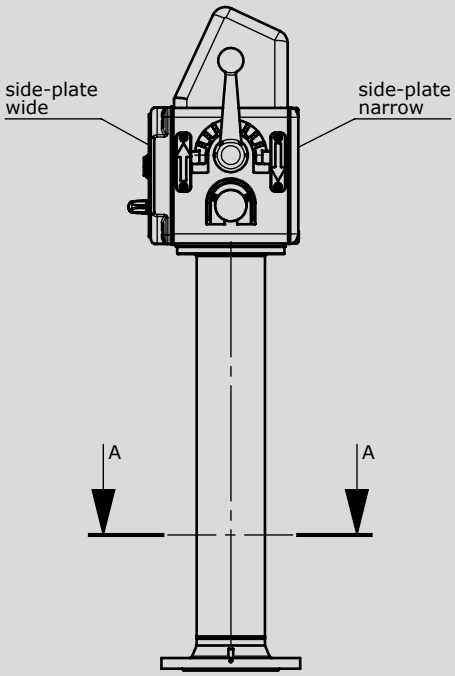

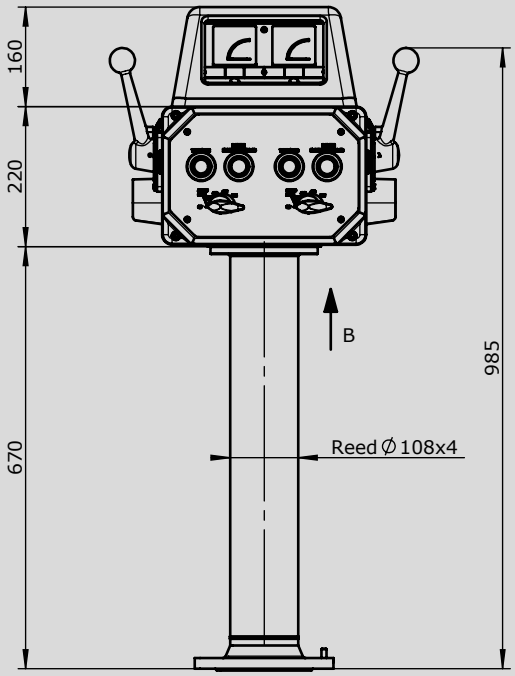

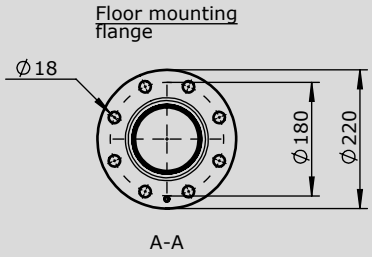

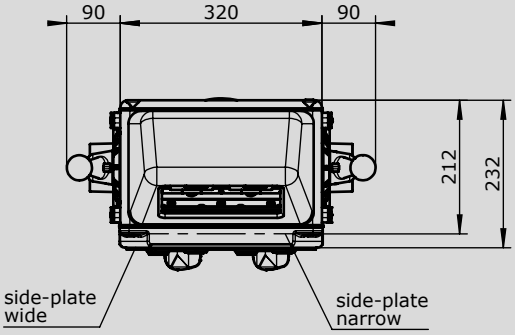

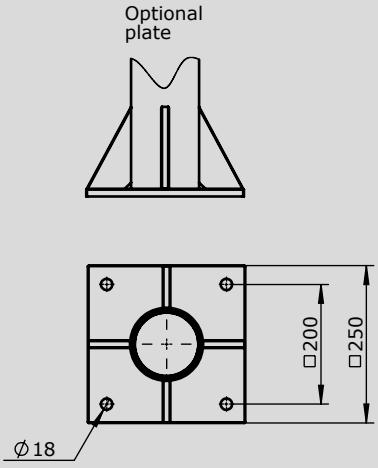

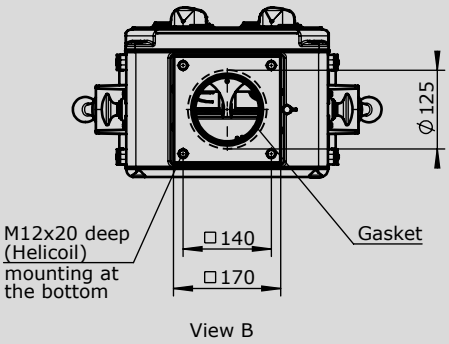

3

Technical details may vary based on configuration or application! Technical data subject to change without notice!

V2015/1 20.08.2015

Control pedestal for offshore
U23 / 23

GESSMANN Industrial Controllers

The control pedestal U22 / 23 accomodates the devices necessary for control and monitoring.
Ready wired, it can be quickly and easily installed on the sea deck. The housing (pedalstel head) is made of seawater-resistant aluminium.

Surface treatment:
Priming and structur-finishing paint
Standard colour RAL 7032 pepple-grey

Example

Technical data:

Operation temperature	-40°C to +60°C
Degree of protection	IP 66

U23 / 23 / N61.../N62... / H / PW / 2D / PQ / KLV / X

Housing

U23/23	with 1 narrow side-plate with pillar-gasket
U23/23A	Side-plate narrow gasket
IA	Monitoring devices cover with gasket for max. 2 monitors 72x72 mm or 4 monitors 72x36 mm and max. 6 indicating devices pos. 28, 29
RS	Pillar 108 mm Ø 670 mm height with flange quadratic or round

Masterswitch / Control-switch

N61	HG Masterswitch with ball handle and indicating labels
N62	KN Control-switch with knob and indicating label

- HG - 01 Z P - A05 P134 - X

Axis 1: direction 3-4

(Standard contacts gold-plated 2A 250V AC15)

01	2 contacts	Standard contact - arrangement see page 106	
02	4 contacts	z.B.	
03	6 contacts	A05	MS 21
04	8 contacts	A0500	MS 21-00
		A99 *contact - arrangement according customer request*	

Z	Spring return			
R	Friction brake			
P	Potentiometer	P131	T396 2x0,5 kOhm	I max. 1 mA
		P132	T396 2x1 kOhm	I max. 1 mA
		P133	T396 2x2 kOhm	I max. 1 mA
		P134	T396 2x5 kOhm	I max. 1 mA
		P135	T396 2x10 kOhm	I max. 1 mA
		More potentiometer on request!		

3

Technical details may vary based on configuration or application! Technical data subject to change without notice!

Control pedestal for offshore
U23 / 23

GESSMANN Industrial Controllers

U23 / 23 / N61.../N62... / H / PW / 2D / PQ / KLV / X

Command and indicating devices

H	Heating	20 Watt 220 or 110 V 50/60 Hz	
PV	Mushroom head push button latching	22 latching with indicating label	1 Ö
P	Mushroom head push button	22 with indicating label	1 S
D	Push button	22 with indicating label	1 S
W	Selector switch 0--1	22 with indicating label	1 S
L	Indicator light	22 with indicating label	Diode 24 Volt
L	Indicator light	22 with indicating label	Diode 230 Volt AC
	Contact block additional		1 S or 1 Ö
L	Indicator light	22 with indicating label	Diode 24 Volt protection IP65
L	Indicator light	10 with indicating label	Diode 24 Volt protection IP65

Display devices

PQ	Powermeter PQ 72 1mA DC	Engraved your instructions
PQI	Powermeter PQ 72 1mA DC illuminated 24 Volt	Engraved your instructions
PQ	Powermeter PQ 72x36 1 mA DC	Engraved your instructions
PQI	Powermeter PQ 72x36 1 mA DC illuminated 24 Volt	Engraved your instructions
EQ	Amperemeter EQ 72 100/200/ 1A	Engraved your instructions
EQI	Amperemeter EQ 72 100/200/ 1A illuminated 24 Volt	Engraved your instructions
EQ	Amperemeter EQ 72x36 100/200/1A	Engraved your instructions
EQI	Amperemeter EQ 72x36 100/200/1A illuminated 24 Volt	Engraved your instructions

Wiring

KLV on terminal block 2,5 qmm with wire line 0,75 qmm

Special model

X	Special / customer-specific

Technical details may vary based on configuration or application! Technical data subject to change without notice!

V2015/1 10.02.2015

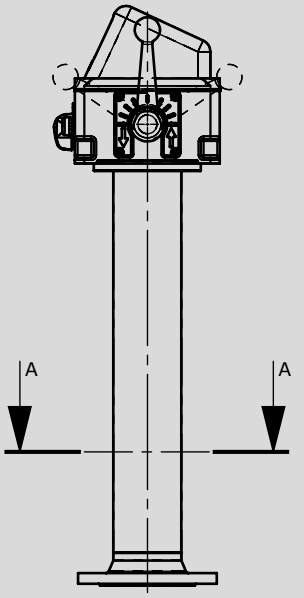

Protection with narrow cover

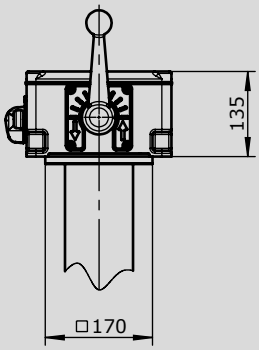

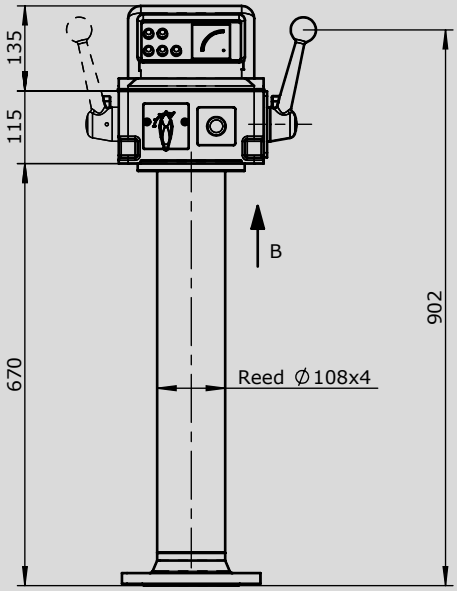

Floor mounting flange

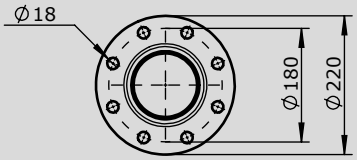

A-A

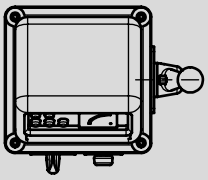

Optional plate

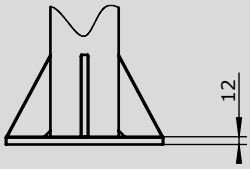

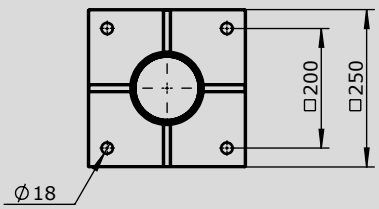

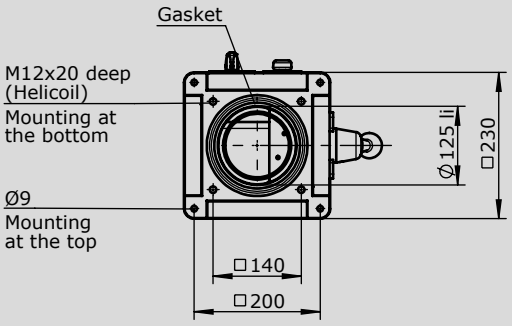

View B

3

Technical details may vary based on configuration or application! Technical data subject to change without notice!

Naval cruise controller
AZ1

GESSMANN Industrial Controllers

The naval cruise controller AZ1 is a rugged switching device.
The modular design enables the switching device to be used universally.

The design includes:
The mechanical control-system for the engine speed 0-max. rpm. switching angle 60 degrees with pressure print at 7 degrees and friction brake direction 0-2.
The mechanical control-system for the steering left/right direction 13-14, 360 degrees with pressure points 4x90 degrees and friction brake.

The AZ1 is resistant to oil, maritime climate, ozone and UV radiation.

Technical data

Mechanical life AZ 1	12 million operating cycles
Operation temperature	-40°C til +60°C
Degree of protection	IP 66

Example

AZ1	- L	- N	E2112	- X

Basic unit

AZ1 Naval cruise controller

Options

L Scale illuminated (LED) 24V dimmable

N Follow-up control system 24 Volt DC for direction 0-2 and 13-14

Interface

Voltage output (not stabilized)

Supply voltage 4,75-5,25VDC

Characteristic: 1 = contra rotating, 2 = concurrently rotating

0,5...2,5...4,5V redundant per axis	1 axis	E103 1
	2 axis	2

Voltage output

Supply voltage 9-32VDC (*11,5-32VDC)

Characteristic: 1 = contra rotating, 2 = concurrently rotating

0,5...2,5...4,5V redundant per axis	1 axis	E111 1
	2 axis	2

Output power

Supply voltage 9-32VDC

Characteristic: 1 = contra rotating, 2 = concurrently rotating

4...12...20mA redundant per axis	1 axis	E211 1
	2 axis	2

Special model

X Special / customer-specific

4

Technical details may vary based on configuration or application! Technical data subject to change without notice!

V2015/1 10.02.2015

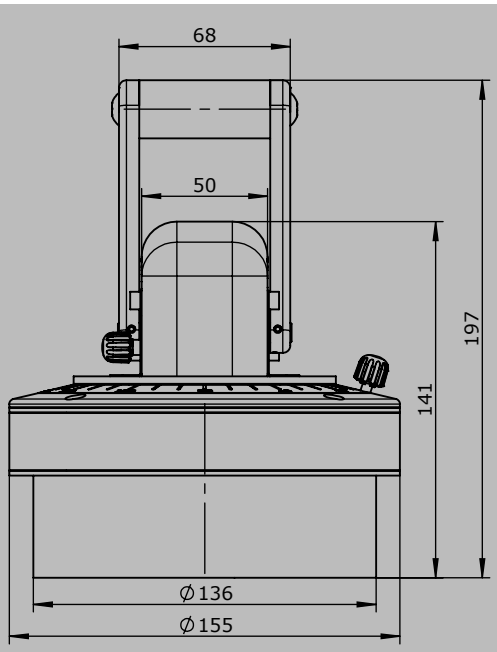

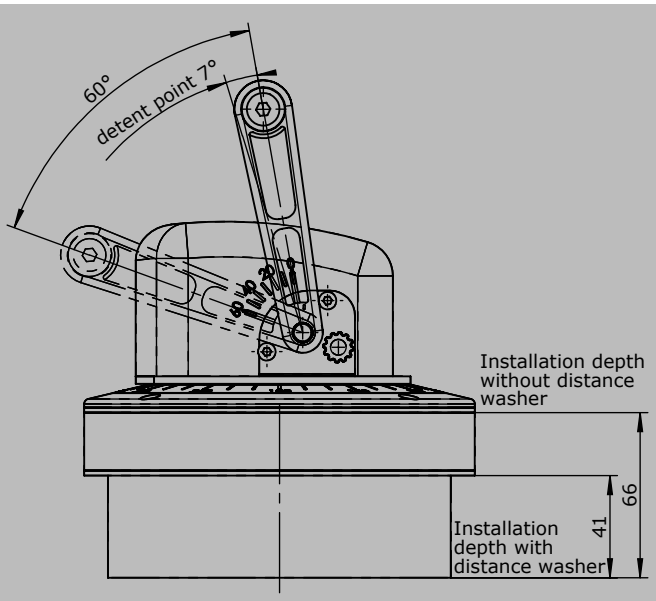

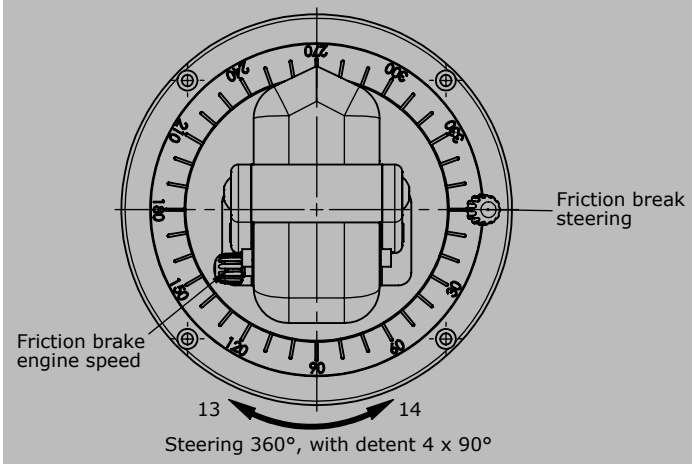

Edition:
with motor rosseting control system

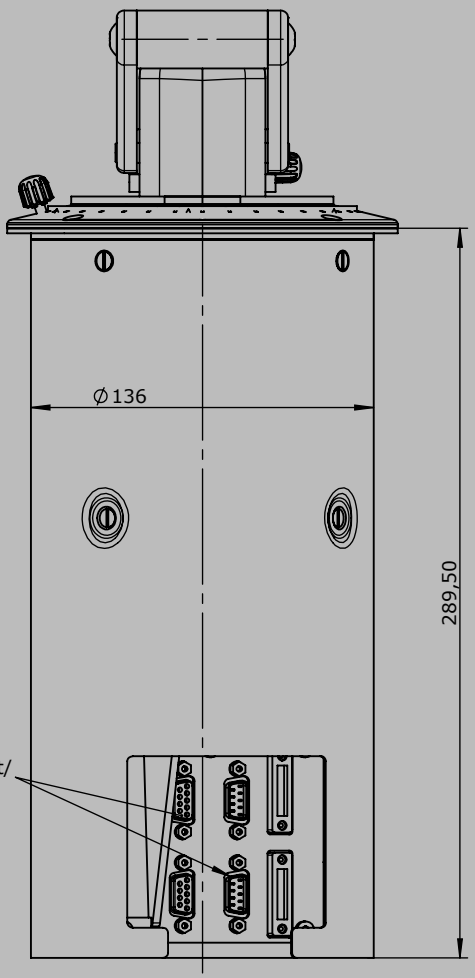

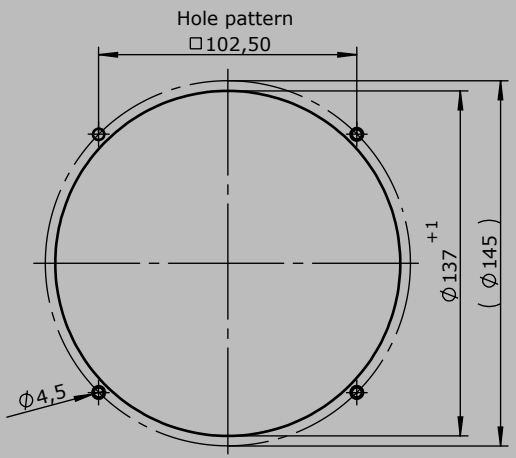

4

Technical details may vary based on configuration or application! Technical data subject to change without notice!

Pedal-controller
P7 / PP7

The pedal-controller P7 and PP7 is a rugged switching devices for footing applications. The pedal-controller is resistant to oil, maritime conditions e.g. offshore /vessels, UV radiation typically from the sun.

Technical data

mechanical life P7	6 million operating cycles
mechanical life PP7	10 million operating cycles
Operation temperature	-40°C til +60°C
Degree of protection P7	IP 54
Degree of protection PP7	IP 65
Colour	RAL 7032 pebble-grey

Example

P7	- 1 Z	P	- A01	P124	-X

Basic unit

P7 Pedal-controller

reinforced version

PP7 Pedal-controller

Detent

without
R1 0-2
R2 0-3
R3 0-4
R4 1-0-1
R5 2-0-2

Direction 1-2

1	1 contact	Standard contact - Arrangement see page 106		
2	2 contacts	z.B.		
3	3 contacts	MS 11	A01	
4	4 contacts	MS 12	A02	
5	5 contacts	MS 13	A03	
6	6 contacts	MS 14	A04	
*only possible without potentiometer!		MS 21	A05	
		A99 contact - arrangement according customer request		

Z Spring return

R Friction brake

(P) Mounting options for potentiometer and encoder (Gessmann-types)

P	Potentiometer	P121	T374	0,5 kOhm	I max. 1 mA
		P122	T374	1 kOhm	I max. 1 mA
		P123	T374	2 kOhm	I max. 1 mA
		P124	T374	5 kOhm	I max. 1 mA
		P125	T374	10 kOhm	I max. 1 mA
		More potentiometer on demand!			

Special model

X Special / customer-specific

Technical details may vary based on configuration or application! Technical data subject to change without notice!

V2015/1 10.02.2015

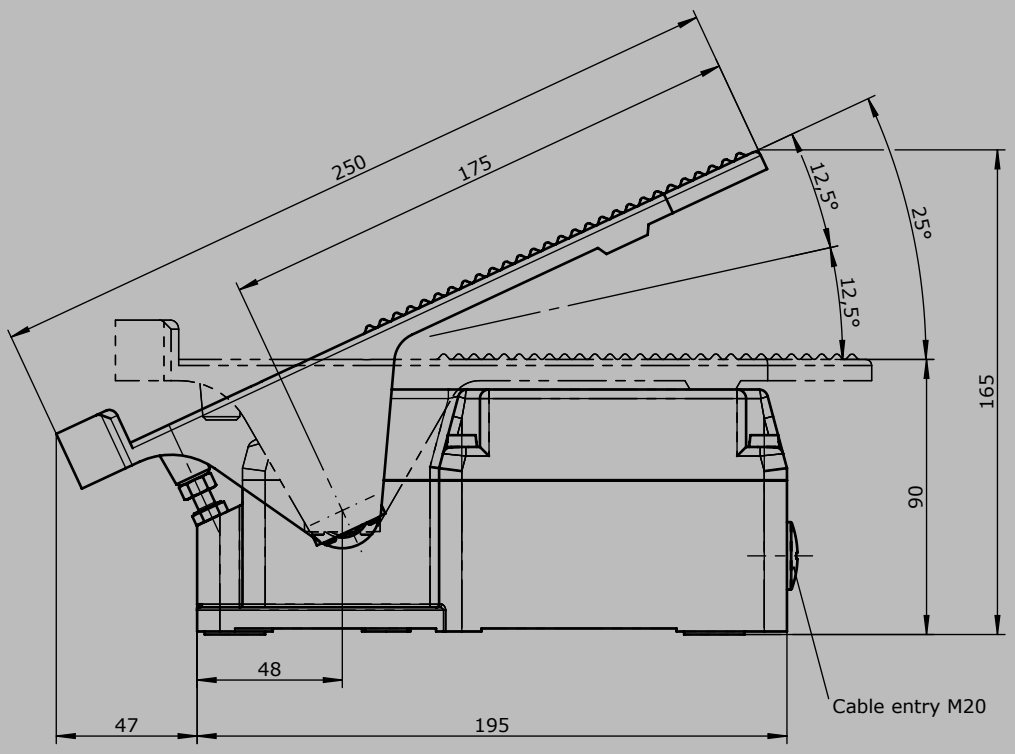

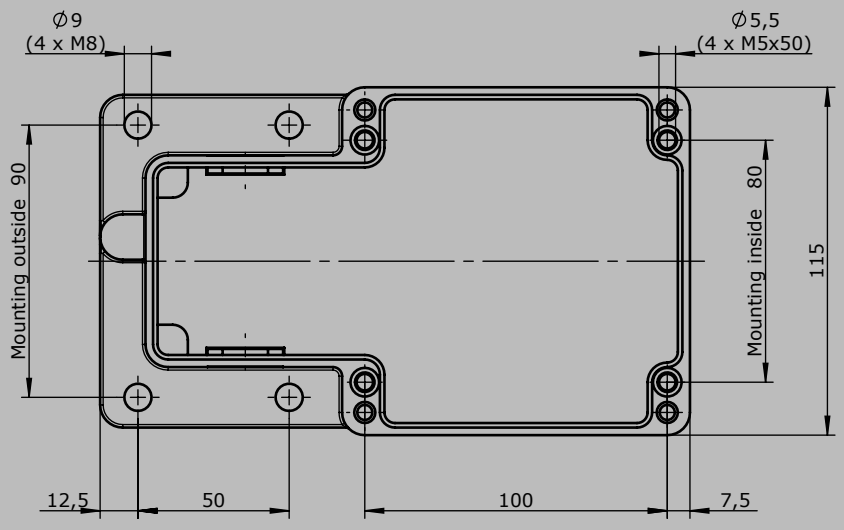

Technical details may vary based on configuration or application! Technical data subject to change without notice!

Pedal-controller
P8 / PP8

GESSMANN Industrial Controllers

The pedal-controller P8 and PP8 is a rugged switching devices for footing applications. The pedal-controller is resistant to oil, maritime conditions e.g. offshore /vessels, UV radiation typically from the sun.

Technical data

mechanical life P8	6 million operating cycles
mechanical life PP8	10 million operating cycles
Operation temperature	-40°C til +60°C
Degree of protection P8	IP 54
Degree of protection PP8	IP 65
Colour	RAL 7032 pebble-grey

Example

P8	- 1 Z	P	- A01	P124	-X

Basic unit

P8	Pedal-controller
	Reinforced version
PP8	Pedal-controller

Detent

	without
R1	0-2
R2	0-3
R3	0-4

Direction 1-2

1	1 contact	Standard contact - Arrangement see page 106		
2	2 contacts	z.B.		
3	3 contacts	MS 11	A01	
4	4 contacts*	MS 12	A02	
5	5 contacts*	MS 13	A03	
6	6 contacts*	MS 14	A04	
		A99 contact - arrangement according customer request		

Z	Spring return
R	Friction brake
(P)	Mounting options for potentiometer and encoder (Gessmann-types)

P	Potentiometer	P121	T374	0,5 kOhm	I max. 1 mA
		P122	T374	1 kOhm	I max. 1 mA
		P123	T374	2 kOhm	I max. 1 mA
		P124	T374	5 kOhm	I max. 1 mA
		P125	T374	10 kOhm	I max. 1 mA
		More potentiometer on demand!			

Special model

X	Special / customer-specific

4

Technical details may vary based on configuration or application! Technical data subject to change without notice!

V2015/1 10.02.2015

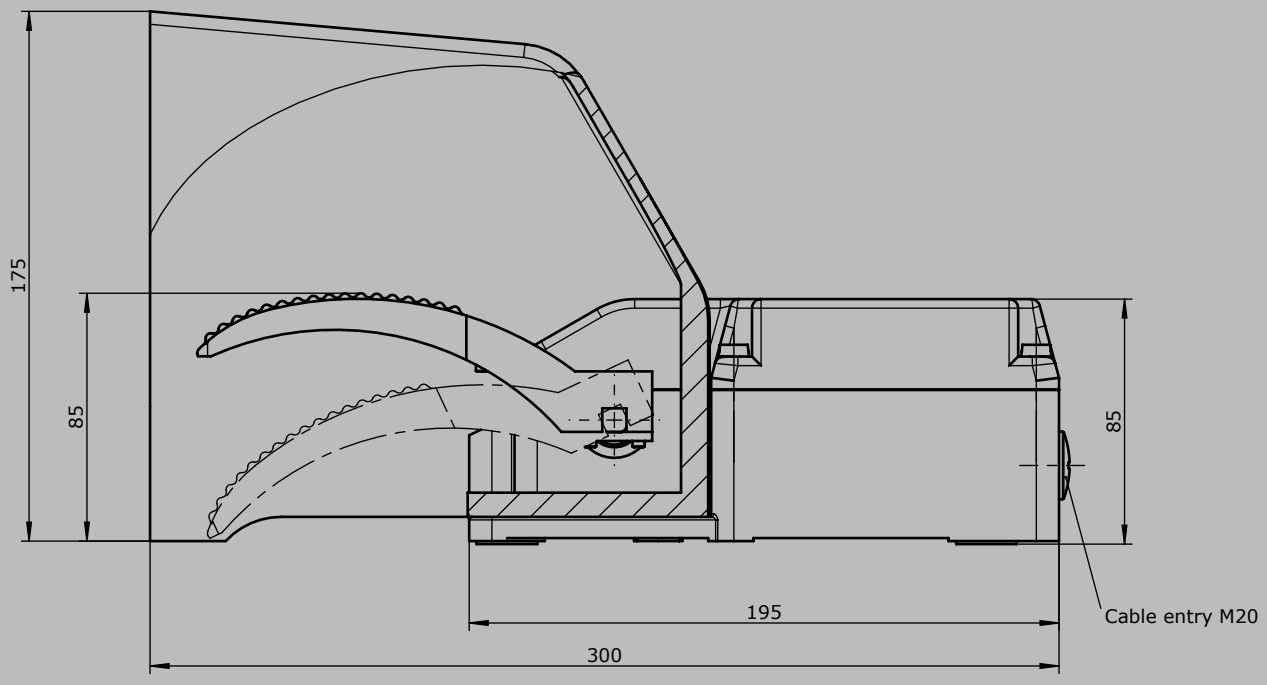

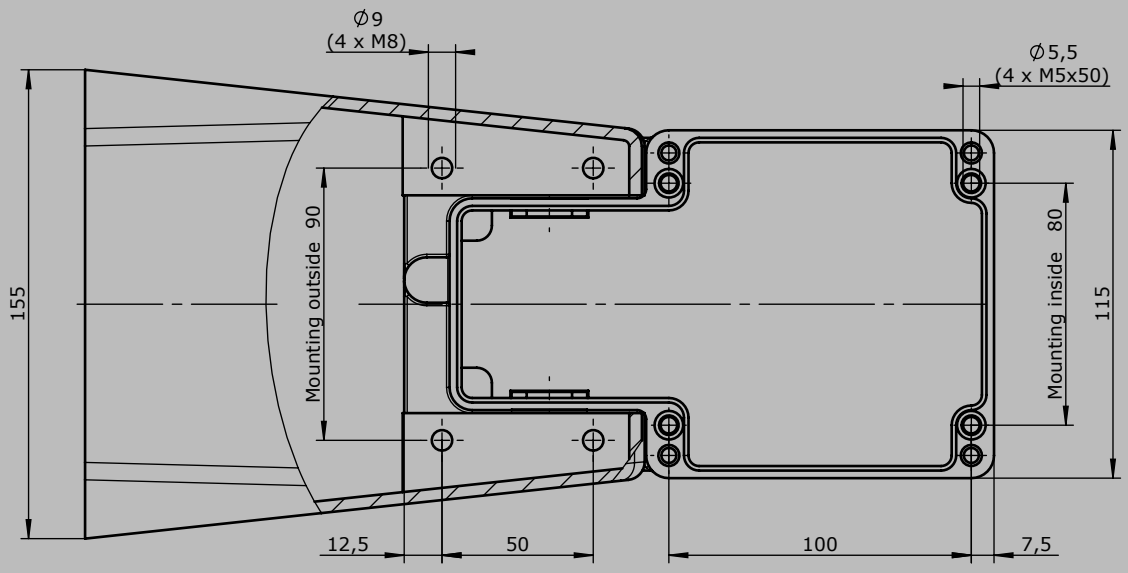

Technical details may vary based on configuration or application! Technical data subject to change without notice!

Pedal-controller
P10/P11/P12

GESSMANN Industrial Controllers

The pedal-controller P10/P11/P12 is a rugged switching device for electro-hydraulic.
The modular design enables the switching device to be used universally.
The P10/P11/P12 is resistant to oil, maritime, climate, ozone and UV radiation.

Technical data

Mechanical life P10	8 million operating cycles
Operation temperature	-40°C til +60°C
Degree of protection P10	IP 54

Example

P10	- 1 Z	P	- A01	P224	- B	- X

Basic unit

P10	Pedal-controller, 0-30°
P11	Pedal-controller, 15°-0-15°
P12	Pedal-controller, 0-15°

Detent

	without
R	with detent

Direction 1-2

1	1 contact	Standard contact - arrangement see page 106	
2	2 contacts	z.B.	
3	3 contacts	MS 11	A01
		MS 12	A02
		MS 13	A03
		MS 21	A05
		A99 contact - arrangement according customer request	

Z	Spring return
R	Friction brake
(P)	Possibility of mounting potentiometer (Gessmann-types)

P	Potentiometer	P222	T362	1 kOhm l max. 1 mA
		P223	T362	2 kOhm l max. 1 mA
		P224	T362	5 kOhm l max. 1 mA
		More potentiometer on request!		

Cover housing

B	Cover housing with cable entry M20

Special model

X	Special / customer-specific

4

Technical details may vary based on configuration or application! Technical data subject to change without notice!

V2015/1 10.02.2015

P10/P11

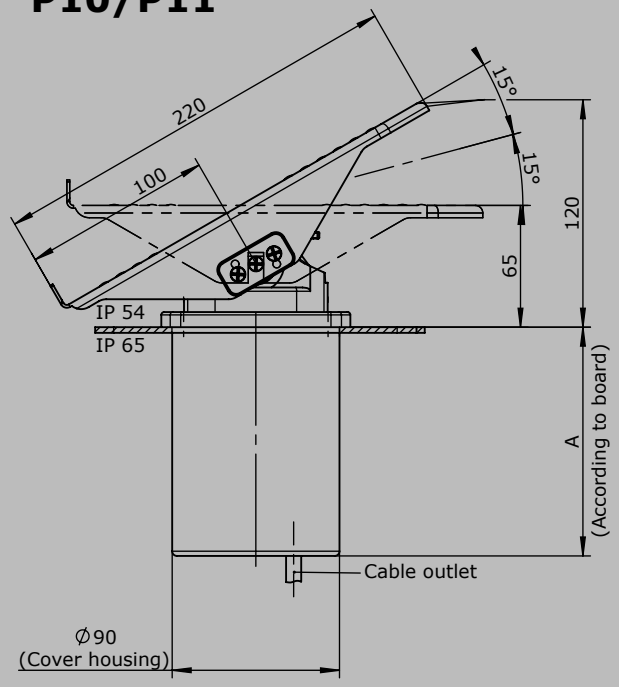

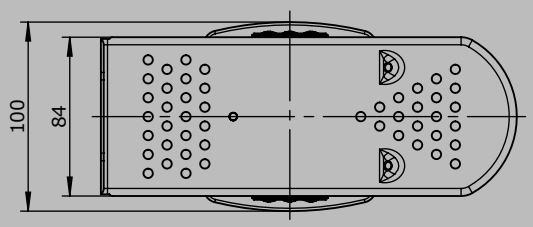

P12

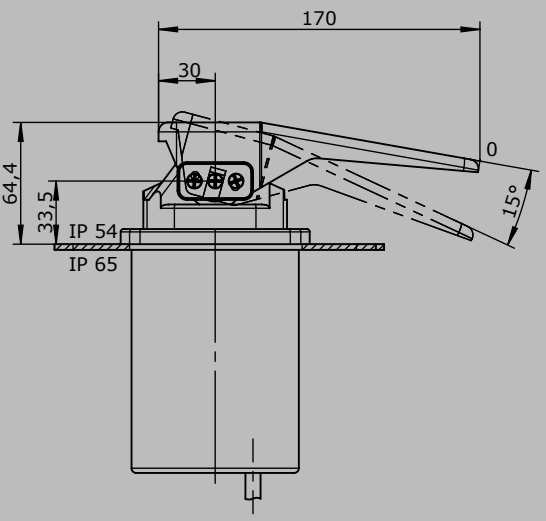

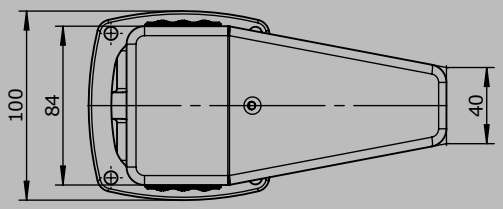

Hole pattern

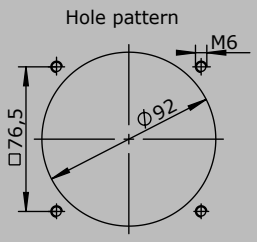

4

Technical details may vary based on configuration or application! Technical data subject to change without notice!

Gear limit switch
GE 1 / GE 2

GESSMANN Industrial Controllers

The gear limit switch GE 1 / GE 2 is a rugged switching device designed for hoisting applications.
The modular micro changeover contacts with positive opening operation.
The device is programmed by means of stepless adjustment of double cam disks, which can be provided from 18° to 192° contact disks according to the switching program required.
The type GE 1 includes a double cam disk conjointly lockable.
The type GE 1 includes a double cam disk conjointly lockable.

Technical data

Mechanical life GE1/GE2	10 million operating cycles
Operation temperature	-40°C til +60°C
Degree of protection	IP 65
Colour	RAL 7032 pebble grey

Example

	GE 1	- 10	- 4	- P		- U7	- P444	- 18	- 30	- 60	- 90	- X

Basic unit

GE 1	Gear limit switch GE 1 with mounting flange
GE 2	Gear limit switch GE 2 with mounting flange

Gearing

Ratios:	2:1	to	10:1	example: 10:1 => 10
	11:1	to	20:1	
	21:1	to	40:1	
	41:1	to	80:1	
	81:1	to	160:1	
	161:1	to	320:1	

Limit switch

2	2 contacts
3	3 contacts
4	4 contacts
5	5 contacts
6	6 contacts
7	7 contacts
8	8 contacts
9	9 contacts
10	10 contacts
11	11 contacts
12	12 contacts
13	13 contacts
14	14 contacts
15	15 contacts
16	16 contacts

(P)	Possibility of mounting potentiometer (Gessmann-types)			
P	Potentiometer	P441	PW70	0,5 kOhm I max. 30 mA
		P442	PW70	1 kOhm I max. 30 mA
		P444	PW70	5 kOhm I max. 30 mA
		P445	PW70	10 kOhm I max. 30 mA
		More potentiometer on request!		

Technical details may vary based on configuration or application! Technical data subject to change without notice!

GE 1	- 10	- 4	- P	- U7	- P444	- 18	- 30	- 60	- 90	- X

Aluminium housing

U5	U17/13 170x130 mm (max. 8 contacts GE 1)
U6	U16/16 160x160 mm (max. 12 contacts GE 1/ max. 6 contacts GE 2)
U7	U16/20 160x200 mm (max. 16 contacts GE 1/max. 10 v GE 2)
U8	U16/26 160x260 mm (max. 16 contacts GE2)
U9	U16/35 160x350 mm

Program-disk

Following program-disks are available :

18°, 24°, 30°, 36°, 45°, 60°, 75°, 90°, 110°, 120°, 176°, 192°

Example:

Contact 1: program-disks pair 18° (adjustment range 18°-36°)

Contact 2: program-disks pair 30° (adjustment range 30°-60°)

Contact 3: program-disks pair 60° (adjustment range 60°-120°)

Contact 4: program-disks pair 90° (adjustment range 90°-180°)

Contact n:

Illustration

The programm-disks are infinitely adjustable within 360°

Special model

X	Special / customer specific

Technical details may vary based on configuration or application! Technical data subject to change without notice!

Build-on flange

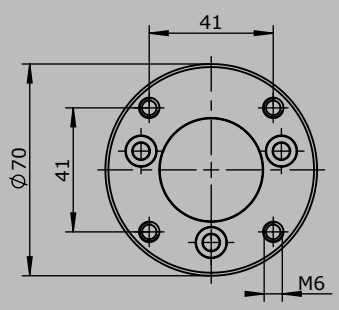

Protection IP 65

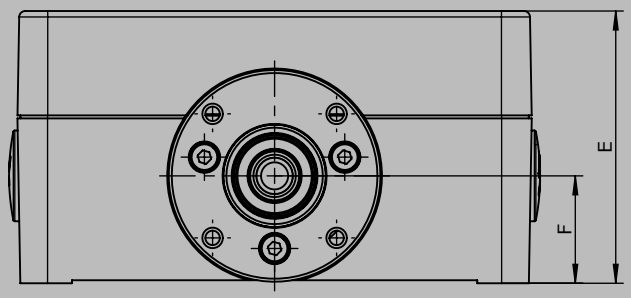

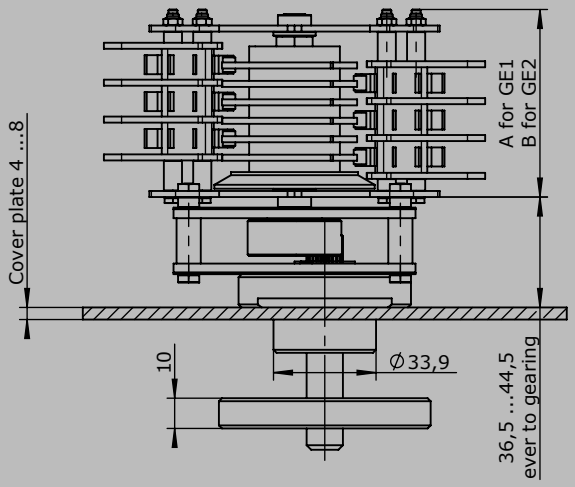

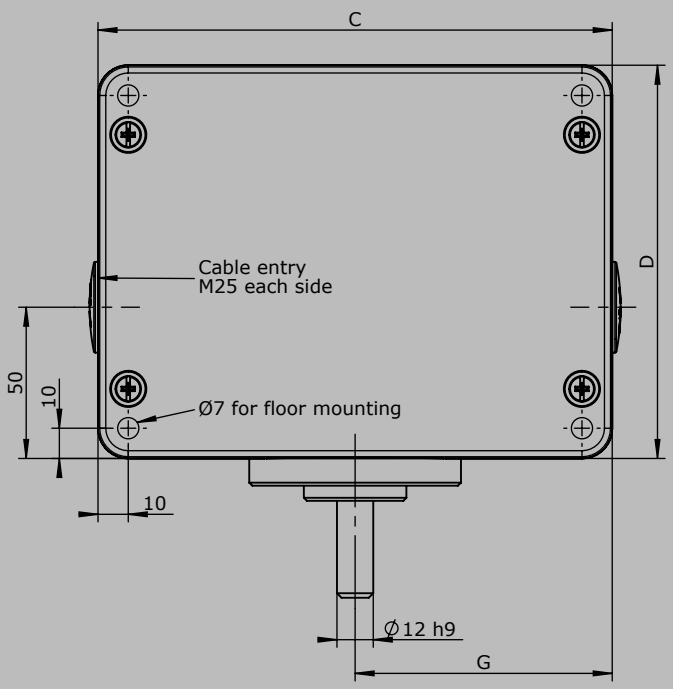

Type	No. of contacts	Dim. A (GE1)	Dim. B (GE2)
1	1	32	35,5
2	2	38,5	42
3	3	44,5	48
4	4	50,5	54
5	5	56,5	60
6	6	63	66,5
7	7	69	72,5
8	8	75	78,5
9	9	81	84,5
10	10	87	90,5
11	11	93	96,5
12	12	99	102,5
13	13	105,5	109
14	14	111,5	115
15	15	117,5	121
16	16	123,5	127

Type	Dim. C	Dim. D	Dim. E	Dim. F	Dim. G
U17/13	170	130	90	35,5	75
U16/16	160	160	91	45	70
U16/20	160	200	100	45	70
U16/26	160	260	91	45	70
U16/35	160	350	100	45	70

Technical details may vary based on configuration or application! Technical data subject to change without notice!

V2015/1 10.02.2015

DC-Contact
SO 1.10 Normally closed (NC)
SS 1.10 Normally open (NO)

The DC contact block is used for signalling and announciation applications.
The snap-action mechanism prevents slow contact opening when the plunger is operated slowly. Quenching of the arc that occurs with DC is suopported by two-capacity permanent magnets.

These are arranged so that the polarity can be ignored when connecting +/- cabling. However, the polarity of the quenching magnets must be noted when installing the contact blocks to prevent the magnets adversly affecting each other. Contact blocks in four different colours are available for polarity identification of the magnets when fitted.

The contact blocks may only be installed on non-magnetizable materials with screw, etc. made of non-ferrous metal.

The self-cleaning silver contacts are designed for low switching frequency, low currents and voltages. Gold coated contacts can be supplied (approx 0,2µ), less than 42 Volt required. The screw connection M3.5 at the side is suitable for 2 conductors max. 2,5mm². The plug-in connection at the top 4.8 x 0.8 mm DIN 46247.

Several contact blocks can be plugged on the top of each other and operated jointly. The plug-type terminals are then only accessible on the top unit. The contact blocks can be provided with shock protection to DIN VDE 0106 Part 100.

Example

	Switching capacity		
	NC	NO	Time constant
250 V DC	2 A	1 A	20 ms
125 V DC	4 A	3 A	20 ms
50 V DC	6 A	6 A	20 ms
30 V DC	10 A	10 A	20 ms
250V AC 15	6 A	6 A	

Technical data

Mechanical life	2 million operating cycles
Electrical service life	50.000 operating cycles (at 2A 250VDC L/R 20 ms)
Operation temperature	-40°C til +60°C
Degree of protection	IP 40

		SO 1.10	- B	- R	- F	- X
Basic unit						
SO1.10	DC-contact normally closed (NC)					
	Colour code grey or blue					
SS1.10	DC-contact normally open (NO)					
	Colour code yellow or green					
Attachment						
B	Shock protection KEG 142 to DIN VDE 0106 part 100					
R	Roller lever					
K	Toggle lever (switching is one direction only)					
F	Plug-in connection at side 4,8 x 0,8 mm (2 pieces)					
AU	Contacts gold-coated approx. 0,5					
Special model						
X	Special / customer specific					
X1	Contact without quenching magnets					

Technical details may vary based on configuration or application! Technical data subject to change without notice!

DC-Contact
SO 1.10 Normally closed (NC)
SS 1.10 Normally open (NO)

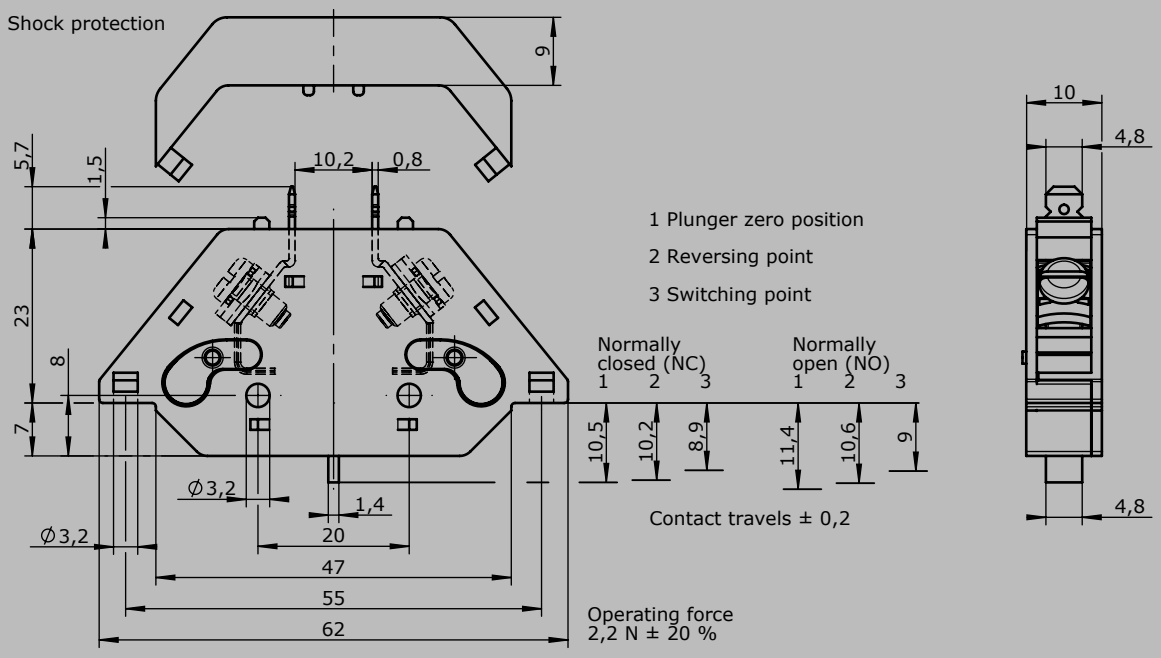

with roller lever

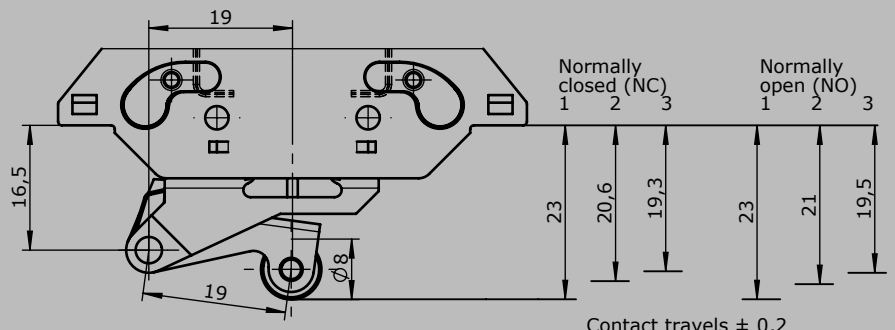

with toggle lever

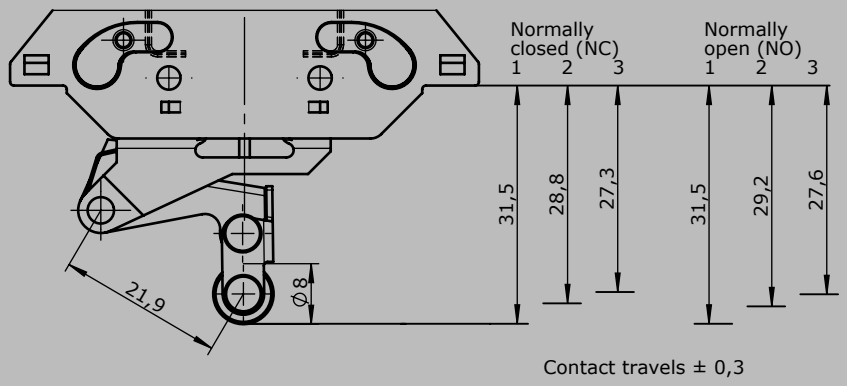

4

Technical details may vary based on configuration or application! Technical data subject to change without notice!

V2015/1 10.02.2015

Signal-cam controller NU 1

The cam controller NU 1 is used as a signal and announciation switch in HV systems.
This rugged switching device has cam disks made of insulation material that can be set at 10° intervals.
The DC contact blocks are designed to permit series assembly, which can be operated simultaneously.

Technical data

Mechanical life NU1	2 million operating cycles
Operation temperature	-40°C til +60°C
Degree of protection	IP 40 / IP 65 with aluminium housing

Switching capacity	NC	NO	Time constant
250V DC	2A	1A	20 ms
125V DC	4A	3A	20 ms
50V DC	6A	6A	20 ms
30V DC	10A	10A	20 ms
250V DC15	6A	6A	

Example

NU1	- 4	- 4	- F2	- Z	- W	- A		- X

Basic unit

NU 1 Signal-cam controller

Contacts (1. range)

2 2 contacts
4 4 contacts
6 6 contacts
8 8 contacts
10 10 contacts
12 12 contacts
14 14 contacts
16 16 contacts

Contacts (2. range)

2 2 contacts
4 4 contacts
6 6 contacts
8 8 contacts
10 10 contacts
12 12 contacts
14 14 contacts
16 16 contacts

4

Technical details may vary based on configuration or application! Technical data subject to change without notice!

Signal-cam controller NU 1

GESSMANN Industrial Controllers

NU1	- 4	- 4	- F2	- Z	- W	- A		- X

Option

F1	1 free shaftend with hexagonal 12 mm
F2	2 free shaftend diameter 12 mm
F3	2 free shaftend with hexagonal 12 mm
Z	Spring return
W	Mounting angles (2 pieces)
GH	Link lever
A	Cover housing off Astralon
	til installation size 4 contacts
	til installation size 4 contacts
	til installation size 4 contacts
	til installation size 4 contacts
B	Shock protection KEG 142 for single contact

Aluminium housing

U11	U23/20 232x202 mm (max. 10 contacts)
U12	U23/28 232x280 mm (max. 16 contacts)

Housing only possible with single-row version contacts

Special model

X	Special / customer-specific

4

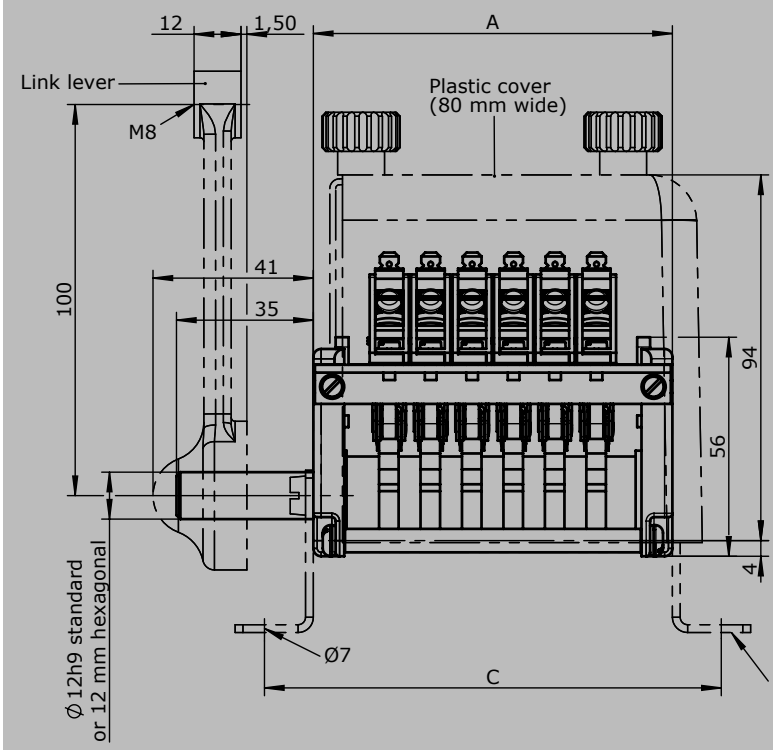

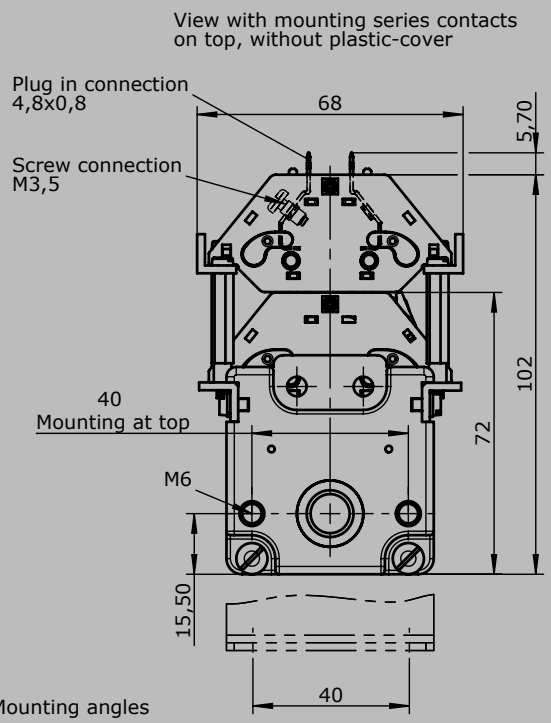

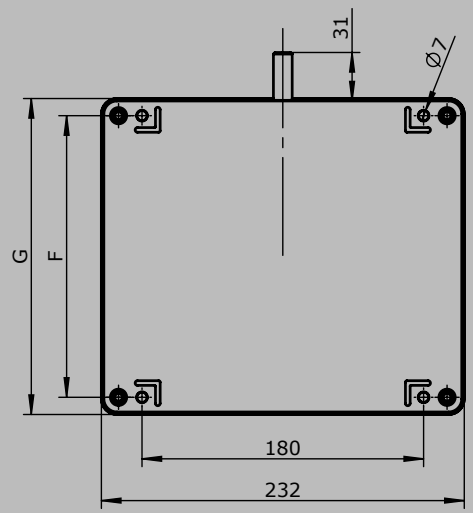

Aluminuim housing
protection IP 65

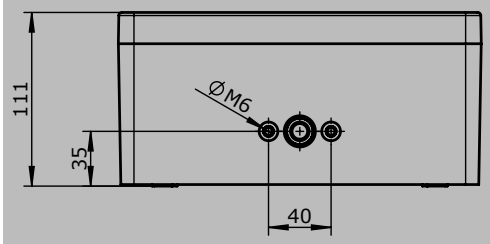

Type	No. of contacts	Dim. A	Dim. C	Housing	Dim. F	Dim. G
2	2	7	74	U 23/20	180	202
4	4	70	95			
6	6	91	117			
8	8	113	138			
10	10	134	159			
12	12	155	180	U 23/28	260	280
14	14	176	201			
16	16	197	222			

Technical details may vary based on configuration or application! Technical data subject to change without notice!

Headquarters
and locations of Gessmann Group

GESSMANN
Industrieschaltgeräte

Headquarters

W. Gessmann GmbH
Postfach 11 51
74207 Leingarten
Eppinger Straße 221
74211 Leingarten
Phone +49 7131 40 67-0
Fax +49 7131 40 67-10
gessmann@gessmann.com
www.gessmann.com

Gessmann Group

Sales office France

Bureau Gessmann France
Nicolas Patricot
Chateaufort
Phone +33 65 20 74 55 9
Fax +33 989 264 847
nicolas.patricot@gessmann.com
www.gessmann.com

Sales office Scandinavia

Gessmann Office Finland
Harri Järvenpää
Vuorikatu 30 A
23500 Uusikaupunki
Phone + 358 408 2800 10
harri.jarvenpaa@gessmann.com

Responsible for:

Finnland
Norwegen
Schweden

Subsidiary North America, Mexico, Chile, Canada

SENETT Control Co. Ltd.
Gessmann Group
225 Admiral BLVD.
Mississauga Ontario L5T2T3
Phone +1 905 564 0167
Fax +1 905 564 6633
sales@senett.ca
www.senett.ca

Responsible for:

USA
Mexico
Chile
Canada

Subsidiary Asia

Gessmann China Ltd.
No. 183, Lane 456,
Dieqiao road,
Shanghai 201315.
Phone +86 21 5011 3466
Fax +86 21 5186 1266
sales@gessmann.com.cn
www.gessmann.com

Responsible for:

China

Gessmann Partner

Brazil
Choice Tecnologia Ind.e Com.de
equipamentos industrial Ltda
Rua Afonso Fruet, 131, Fazendinha
81320-020 Curitiba / PR
Phone +55 41 3015 7953
Fax +55 41 3015 7853
flavio@choicetech.com.br
www.choicetech.com.br

USA
OEM Controls, inc.
10 Controls Drive
Shelton, Conn. 06484
Phone +1 203 929 84 31
Fax +1 203 926 69 24
ksimons@oemcontrols.com
www.oemcontrols.com

Representatives in Germany

I.K.F. Ingenieur- und Vertriebsges.mbH
An der Strusbek 8 D
22926 Ahrensburg
Phone +49 4102 21 13-0
Fax +49 4102 21 13-10
info@ikf-ahrensburg.de
www.ikfgmbh.de

Dr.-Ing. Klaus Zimmermann Ingenieurbüro
Hauptstraße 158
06493 Harzgerode 0T Neudorf
Phone +49 39484 63 64
Fax +49 39484 63 19
ib-zimmermann@gmx.de
www.gessmann.com

Bretzel GmbH
Postfach 64 331, 64331 Weiterstadt
Am Rotböll 8, 64331 Weiterstadt
Phone +49 0615 086 56 00
Fax +49 0615 086 56 069
info@bretzel-gmbh.de
www.bretzel-gmbh.de

Systemautomation Zimmermann
Dipl.-Ing. Jan Zimmermann
Hauptstraße 158
06493 Harzgerode 0T Neudorf
Phone +49 39484 74 24 84
Fax +49 39484 63 19
saz-zimmermann@gmx.de
www.gessmann.com

Christiani Elektro-Vertriebs-GmbH
Innungstraße 39
50354 Hürth
Phone +49 2233 3 50 35
Fax +49 2233 3 61 81
vertrieb@christiani-gmbh.de
www.christiani-gmbh.de

Dealer network
worldwide

GESSMANN
Industrieschaltgeräte

Argentina
Cavotec Latin America S.A.
calle Bogotá 1362
B1640DDL Martínez
Buenos Aires
Phone +54 11 4836 2726
Fax +54 11 4836 2116
info.ar@cavotec.com
www.cavotec.com

Australia
Cavotec Australia Pty Ltd.
Head Office Newcastle
P.O. Box 577
28 Mitchell Road, Cardiff NSW 2285
Phone +61 2 4956 5788
Fax +61 2 4956 5823
phillip.macridis@cavotec.com
www.cavotec.com

Belgium
Batenburg Mechatronica B.V.
Leuvensesteenweg 613
1930 Zaventem zuid 7
Phone +32 225 33 120
Fax +32 225 30 897
info@batenburgbelgie.be
www.batenburg-mechatronica.com

Chile
Sistemas de Control Ltda.
La Cordillera 21
Lampa-Santiago
Phone +562 295 27966
alorca@io.cl
www.io.cl

China
Cavotec (Shanghai) Power Supply and Crane Technology Co., Ltd.
Unit 11, No. 1951, Duhui Road
Minhang District
Shanghai 201108
Phone + 86 21 5442 9778
Fax + 86 21 3407 3498
info.cn@cavotec.com
www.cavotec.com

Czech Republic
RIA power s.r.o.
Míru 3
739 61 Trinec-Kanada
Phone +420 553038848
Fax +420 558 988815
riapower@riapower.cz
www.riapower.cz

Denmark
Baastrup A/S
Dronning Olgas Vej 30
2000 Frederiksberg
Phone +45 38 10 21 29
Fax +45 38 10 29 69
info@baastrup.com
www.baastrup.com

Finland
Kentek Oy
Postbox 18, 01721 Vantaa
Tiilenlyöjänkuja 4, 01720 Vantaa
Phone +358 9 849 420 0
Fax +358 9 849 420 59
kentek@kentek.fi
www.kentek.fi

Greece
Euroelektrik
Stefanidou Kalliopi & Co.
Handelsgesellschaft
P.O. Box 203
50100 Kozani
Phone +30 30 2 46 10 9 44 45
Fax +30 30 2 46 10 9 44 25
kastefa@otenet.gr

Hong Kong
Cavotec Hong Kong Ltd.
Units 1101-2A, 11/F, Golden Centre
188 Des Voeux Road Central,
Hong Kong
Phone +852 2791 6161
Fax +852 2791 1834
info.hk@cavotec.com
www.cavotec.com

India
Arihant Elsys Private Limited
Sheel Tara House
24/4866 Ansari Road Darya Ganj
New Delhi - 110002
Phone +91 11 23 26 90 11
Fax +91 11 23 27 35 54
info@arihantelectricals.com
www.arihantelectricals.com

Iran
Lebon Company
83, NO.9, Brand Center bldg.
Shahid Lavasani (Farmanieh) Str.
Tehran 1954664598
Phone + 98 21 2614 0496
Fax + 89 21 2613 0981
lebon@lebonco.com

Italy
S.P.I.I. Società per Azioni
Via Don Volpi 37, 21047 Saronno VA
Phone +39 02 9 62 29 21
Fax +39 02 9 60 96 11
info@spii.it
www.spii.it

Japan
JEPICO Corporation
Shinjuku Front Tower
21-1 Kita Shinjuku 2-Chome
Shinjuku-ku, Tokyo 169-0074
Phone +81 3 6362 0316
Fax +81 3 5386 8235
a_oeki@jepico.co.jp
http://www.jepico.co.jp/

Office Niiya
Myoujin 3-13-10
636-0022 Ohji-Cho, Kitakatsuragi-Gun,
Nara Pref.
Phone +81 80 5427 6046
h.niiya@krc.biglobe.ne.jp

Korea
Roritec Co. Ltd.
460-1 Hyomun-Dong
Buk-Ku 683-360 Ulsan
Phone +82 52 288 7114
Fax +82 52 288 7124
keonju@roritec.co.kr
www.roritec.co.kr

Malaysia
PINTSCH-BUBENZER MYPORT SDN BHD
No. 22, Jalan Mega 1/4
Taman Perindustrian Nusa Cemerlang,
81550 Gelang Patah,
Johor Darul Takzim
Phone +607 5319 799
Fax +607 5319 798
info@pbmyport.com.my
www.my-port.net

Mexico
Alimentaciones Electricas, S.A. de C.V.
Parque Industrial Empresarial
Cuautlancingo
Rio Suchiate No. 24
CP 72730 Cuautlancingo, PUE
Phone +52 222 210 50 93
Fax +52 222 210 50 69
almesa@mexis.com.mx
www.almesa.com.mx

Netherlands
Batenburg Mechatronica B.V.
P.O. Box 9393, 3007AJ Rotterdam
Stolwijkstraat 33, 3079 DN Rotterdam
Phone +31 10 2 92 87 87
Fax +31 10 2 92 87 65
info.mechatronica@batenburg.nl
www.batenburg-mechatronica.com

Norway
Cavotec Norge, AS
Strandveien 6
3050 Mjøndalen
Postbox 276, 3051 Mjøndalen
Phone +47 32 27 43 00
Fax +47 32 23 00 77
info@cavotec.no
www.cavotec.com

Poland
ELEKTRO-TRADING
ul.P.Gojawiczynskiej 13
44-109 Gliwice, Poland
Phone +48 32 330 45 70
Fax +48 32 330 45 74
et@elektro-trading.com.pl
www.elektro-trading.com.pl

Romania
ELECTRO-DISTRIBUTION S.R.L.
Str. mecet nr. 42-44, sector 2
Bucuresti
Phone +40 21 253 29 55
Fax +40 21 253 29 56
anca.mohonea@electrodistribution.ro
www.electrodistribution.ro

Russia
Smart Automatica JSC
Belinski str 83, office 416
620026 Jekaterinburg
Phone +7 343 344 34 21
inf@smartautomatica.ru

Trader Group Ltd.
Himicheskyi narrow str. 1, liter.P
198095 Sankt-Petersburg
Phone +7 812 3259 365
tradergrouppb@gmail.com

EIM engineering Ltd.
Trefoleva str. 1, liter.P
198097 Sankt-Petersburg
(Kasachstan)
Phone +7 965 038 89 66
info@eim-engineering.ru

Serbia
Bosnia-Herzegovina
Kosovo
Macedonia
Montenegro
Elektro UMI d.o.o.
Milene Cupic 11
11250 Zeleznik
Phone +381 11 2576 206
Fax +381 11 2577 364
office@elektroumi.rs
www.elektroumi.rs

Singapore
Cavotec Singapore PTE Ltd.
30 Toh Guan Road #07-02
Singapore 608840
Phone +65 6862 2545
Fax +65 6862 2548
info.sg@cavotec.com
www.cavotec.com

Slovakia
VENIO, s.r.o.
Karmínová 1092/3
01003 Zilina
Phone +421 949 130 270
venio@venio.sk
www.venio.sk

South Africa
Powermite
A division of Hudaco Trading (PTY) Ltd.
92, Main Reef Road
1724 Roodepoort
Phone +27 11 271 0000
Fax +27 11 760 3099
powermite.jhb@global.co.za
www.powermite.co.za

Spain
Kimatic S.L.
Calle Alluitz, 6-1°C
48200 Durango (Bizkaia)
Phone + 34 946 20 10 36
Fax + 34 946 20 8 32
info@kimatic.es
www.kimatic.es

Sweden
Kiepe Elektriska AB
Lodgatan 4, 21124 Malmö
Phone +46 40 29 15 55
Fax +46 40 29 12 31
kiepe@kiepe.se
www.kiepe.se

Switzerland
ELVA AG – Elektrische Verteilanlagen
Werbhollenstrasse 54
4143 Dornach
Phone +41 61 706 85 95
Fax +41 61 706 85 91
info@elva.ch
www.elva.ch

Thailand
Philippines
Vietnam
MTI Engineering CO., LTD
94/20, moo 3, Soi-Janthongaium
Bangrakpattana, Bangbaothong
Nonthaburi 11110
Phone +662 02 1902050 53
Fax +662 02 19020 54
info@mti-eng.com
www.mti-eng.com

Turkey
ARDA Makina Elektrik
Ticaret ve Sanayi Ltd. Sti.
100. Yıl Bulvarı 1230. Street No.1
06374 Ostim-Ankara
Phone +90 312 385 80 37
Fax +90 312 385 80 58
arda@ardaelektrik.com
www.ardaelektrik.com

Ukraine
Ukrgasgeoavtomatika, Ltd.
Str. Okjabrskoj revoluziji, 93
61004 Charkov
Phone +38 057 758 8999
Fax +38 057 759 0732
market@geonorma.com.ua
www.geonorma.prom.ua

United Arab Emirates
Cavotec Middle East FZE
P.O. Box 61 124
Jebel Ali Free Zone, AA2 & AA3-RA08
Dubai
Phone +971 488 38 350
Fax +971 488 38 352
rajiv.kollaikal@cavotec.com
www.cavotec.com

United Kingdom
Cavotec UK Limited
Unit 5/6 St. Anne's Industrial Estate
Limeoak Way
Stockton-on-Tees, TS18 2LS
Phone +44 1624 608 245
Fax +44 1624 608 224
sales@cavotec.com
www.cavotec.com

United States
Cavotec USA Inc.
333 Oates Road
Mooresville, NC 28117
Phone +1 704 873 3009
Fax +1 704 873 3093
kevin.stanford@cavotec.com
www.cavotec.com

GESSMANN
Industrieschaltgeräte

Notes

Notes

GESSMANN
Industrieschaltgeräte

Notes

www.gessmann.com

W. Gessmann GmbH
P/O Box 11 51
74207 Leingarten
GERMANY

Eppinger Straße 221
74211 Leingarten
GERMANY

Phone **+49 (0) 7131 40 67-0**
Fax **+49 (0) 7131 40 67-10**

gessmann@gessmann.com
www.gessmann.com

GESSMANN®
Industrial Controllers